TABLE OF CONTENTS

GENERAL CHILLER INFORMATION & SAFETY

Introduction 6
Warranty 6
Safety 6
Standards for Safety 6
Responsibility for Safety 6
About this Manual 7
Misuse of Equipment 7
Suitability for Application 7
Structural Support 7
Mechanical Strength 7
General Access 7
Pressure Systems 7
Electrical 7
Rotating Parts 7
Sharp Edges 7
Refrigerants and Oils 7
High Temperature and Pressure Cleaning 8
Emergency Shutdown 8
terial Safety Data 8

PRODUCT DESCRIPTION 12

Introduction 12
General Description 12
Compressor 13
Cooler 13
Condenser 14
Economizer 14
Oil Separator / System 14
Oil Cooling 15
Capacity Control 15
Power And Control Panel 15
Microprocessor Controls 15
Motor Current Protection 15
Motor Protector Module 16
Current Overload 16
Thermal Overload 16
Current Unbalance 16
Improper Phase Sequence 16
Motor Protector Dip Switch Settings 17
Motor Starting 21
Keypad Controls 21
Display 21
Entry 21
Set Points 21
Clock 21
Print 21
Program 22
Accessories and Options 22
Multiple Point Power Connection (Standard) 22
Single Point Power Connection with Individual Circuit Protection 22
Single Point Power Connection with Combined Circuit Protection 22
Single Point Power Connection without Circuit Protection 22
Control Circuit Terminal Block 22
Building Automation System (BAS) Interface 22
Condenser Coil Protection 22
DX Cooler Options: 23
Remote DX Cooler 23
Flow Switch Accessory 23
Star-Delta Compressor Motor Starter 23
Unit Enclosures 23
Fans 23
Sound Reduction Options 23
Vibration Isolation 23
Nomenclature 24
Basic Part Number 24
Options Section of Part Number 24

HANDLING AND STORAGE 25

Delivery and Storage 25
Inspection 25
Moving the Chiller 25
Lifting Weights 25

INSTALLATION 26

Location Requirements 26
Outdoor Installations 26
Indoor Installations 26

TABLE OF CONTENTS

Location Clearances **26**
Installation of Vibration Isolators **27**
CP-2 Mounts - Installation 27
Shipping Braces **27**
Pipework Connection **27**
General Requirements 27
Water Treatment **28**
Pipework Arrangement **28**
Connection Types & Sizes **28**
Cooler Connections 28
Option Flanges 28
Refrigerant Relief Valve Piping **28**
Ductwork Connection **29**
General Requirements 29
Electrical Connection **29**
Power Wiring **29**
Standard Units with Mutli Point Power Supply Wiring 29
Units with Single Point Power Supply Wiring 29
Control Transformer Primary Voltage Tappings 30
Remote Emergency Stop Device 30
Control Panel Wiring **30**
Volts Free Contacts 30
Chilled Liquid Pump Starter 30
Run Contact 30
Alarm Contacts 30
System Inputs **30**
Flow Switch 30
Remote Start/Stop Switch 30
Remote Print 30
Remote Setpoint Offset - Temperature 30
Remote Setpoint Offset - Current 30
Power and Control Panel Layouts **31**
Connection Diagrams **32**

COMMISSIONING **35**

Preparation **35**
Preparation - Power Off 35
First Time Start-up 37

OPERATION **38**

General Description **38**
Start-up **38**
Normal Running and Cycling **38**
Shutdown **38**

TECHNICAL DATA **39**

Flow Rate and Pressure Drop Charts **39**
Physical Data **40**
Sound Power Data **41**
Electrical Data **42**
Multiple Point Power Supply Connection 42
Optional Single Point Power Supply Connection and Internal Unit Circuit Breakers 44
Optional Single Point Power Supply Connection with Field Supplied Circuit Protection 46
Optional Single Point Power Supply Connection to Factory Circuit Breaker 47
Compressor Data **47**
Fan Data **47**
Wiring Diagrams **48**
Dimensions **66**
YCAS 130 - 180 (English) 66
YCAS 130 - 180 (SI) 68
YCAS 200 - 230 (English) 70
YCAS 200 - 230 (SI) 72
Clearances **74**
Weight Distribution And Isolator Positions Isolator Mount Positions **75**
Refrigerant Flow Diagram **80**
Process and Instrumentation Diagram **81**
Component Locations **82**
Compressor Components **83**
System Startup Checklist **89**
Unit Checks 89
Panel Checks 90
Initial Startup **90**
Checking Superheat and Subcooling 90
Checking Economizer Superheat 92
Leak Checking 92

TABLE OF CONTENTS

MICROPANEL CONTENTS

1. INTRODUCTION & PHYSICAL DESCRIPTION **94**

1.1 General
1.2 Keypad & Display
1.3 Chiller On (Auto) / OFF Switch
1.4 Microprocessor Board
1.5 Ancillary Circuit Boards
1.6 Circuit Breakers
1.7 Current Transformers (C.T.)
1.8 Transformers
1.9 Motor Protection Modules
1.10 EMS/BAS Connections
1.11 Microprocessor Board Layout
1.12 Logic Section Layout
1.13 Anti-Recycle Timer
1.14 Anti-Coincidence Timer
1.15 Evaporator Pump Control
1.16 Compressor Heater Control
1.17 Evaporator Heater Control
1.18 Pumpdown (LLSV) Control
1.19 Alarms
1.20 Run Status (Chiller)
1.21 Lead / Lag Compressor Selection
1.22 3/4 Compressor Chiller Configuration

2. STATUS KEY & FAULT MESSAGES **104**

2.1 General
2.2 General Status Messages
2.3 Unit Warnings
2.4 Anticipation Control Status Messages
2.5 Unit Fault Status Messages
2.6 System Fault (Safety) Status Messages
2.7 Printout on Fault Shutdown

3. DISPLAY KEYS & OPTION SWITCHES **111**

3.1 General
3.2 Chilled Liquid Temperatures Key
3.3 System Data Keys
3.4 Ambient Temp Key
3.5 Motor Current Key
3.6 Operating Hours / Start Counter Key
3.7 Options Key & Dip Switch Settings
3.8 Function Key

4. PRINT KEYS **115**

4.1 General
4.2 Oper Data Key
4.3 Operating Data - Local Display Messages

4.4 Operating Data - Remote Printout
4.5 History Key
4.6 Fault History Data - Local Display Messages
4.7 Fault History Data - Remote Printout

5. ENTRY KEYS 122
5.1 General
5.2 Numerical Keypad
5.3 Enter Key
5.4 Cancel Key
5.5 ↑↓ Keys

6. SETPOINTS KEYS 123
6.1 General
6.2 Chilled Liquid Temperature Control
6.3 Local Cooling Setpoints Key
6.4 Remote Cooling Setpoints Key

7. CLOCK KEYS 127
7.1 General
7.2 Set Time Key
7.3 Set Schedule / Holiday Key
7.4 Manual Override Key

8. PROGRAM KEY 129
8.1 General
8.2 Program Key - User Programmable Values
8.3 Programming "Default" Values
8.4 Condenser Fan Control

MAINTENANCE 135
General Requirements 135
Daily Maintenance 135
Scheduled Maintenace 135
Chiller/Compressor Operating Log 136
Maintenance Requirements 137
General Periodic Maintenance Checks - Standard Units 138
SPARE PARTS 139
Recommended Spares 139
Recommended Compressor Oils 139
Associated Drawings 139
TROUBLESHOOTING 140
Competent Person's Troubleshooting Guide 140
Sensor Calibration Charts 142
Limited Warranty 143
Temperature Conversion Chart 144

GENERAL CHILLER INFORMATION & SAFETY

INTRODUCTION

YORK YCAS *Millennium* chillers are manufactured to the highest design and construction standards to ensure high performance, reliability and adaptability to all types of air conditioning installations.

The unit is intended for cooling water or glycol solutions and is not suitable for purposes other than those specified in this manual.

This manual and the Microprocessor Operating Instructions contain all the information required for correct installation and commissioning of the unit, together with operating and maintenance instructions. The manuals should be read thoroughly before attempting to operate or service the unit.

All procedures detailed in the manuals, including installation, commissioning and maintenance tasks must only be performed by suitably trained and qualified personnel.

The manufacturer will not be liable for any injury or damage caused by incorrect installation, commissioning, operation or maintenance resulting from a failure to follow the procedures and instructions detailed in the manuals.

WARRANTY

York International warrants all equipment and materials against defects in workmanship and materials for a period of one year from initial start-up, or eighteen months from delivery (whichever occurs first) unless extended warranty has been agreed upon as part of the contract.

The warranty is limited to parts only replacement and shipping of any faulty part, or sub-assembly which has failed due to poor quality or manufacturing errors. All claims must be supported by evidence that the failure has occurred within the warranty period, and that the unit has been operated within the designed parameters specified.

All warranty claims must specify the unit model, serial number, order number and run hours/starts. These details are printed on the unit identification plate.

The unit warranty will be void if any modification to the unit is carried out without prior written approval from York International.

For warranty purposes, the following conditions must be satisfied:

The initial start of the unit must be carried out by trained personnel from an Authorized YORK Service Center. See Commissioning, page 35.

Only genuine YORK approved spare parts, oils and refrigerants must be used. Recommendations on spare parts can be found on page 139.

All the scheduled maintenance operations detailed in this manual must be performed at the specified times by suitably trained and qualified personnel. See Maintenance Section, page 135.

Failure to satisfy any of these conditions will automatically void the warranty. See Warranty Policy, page 143.

SAFETY

Standards for Safety

YCAS *Millennium* chillers are designed and built within an ISO 9002 accredited design and manufacturing organization. The chillers comply with the applicable sections of the following Standards and Codes:

ANSI/ASHRAE Standard 15, Safety Code for Mechanical Refrigeration

ANSI/NFPA Standard 70, National Electrical Code (N.E.C.)

ASME Boiler and Pressure Vessel Code, Section VIII Division 1

ARI Standard 550/590, Centrifugal and Rotary Screw Water Chilling Packages

In addition, the chillers conform to Underwriters Laboratories (U.L.) for construction of chillers and provide U.L./cU.L. listing label.

RESPONSIBILITY FOR SAFETY

Every care has been taken in the design and manufacture of the unit to ensure compliance with the safety requirements listed above. However, the individual operating or working on any machinery is primarily responsible for:

Personal safety, safety of other personnel, and the machinery.

Correct utilization of the machinery in accordance with the procedures detailed in the manuals.

ABOUT THIS MANUAL

The following terms are used in this document to alert the reader to areas of potential hazard.

A **Warning** is given in this document to identify a hazard which could lead to personal injury. Usually an instruction will be given, together with a brief explanation and the possible result of ignoring the instruction.

A **Caution** identifies a hazard which could lead to damage to the machine, damage to other equipment and/or environmental pollution. Usually an instruction will be given, together with a brief explanation and the possible result of ignoring the instruction.

A **Note** is used to highlight additional information which may be helpful to you but where there are no special safety implications.

The contents of this manual include suggested best working practices and procedures. These are issued for guidance only, and they do not take precedence over the above stated individual responsibility and/or local safety regulations.

This manual and any other document supplied with the unit, are the property of YORK which reserves all rights. They may not be reproduced, in whole or in part, without prior written authorization from an authorized YORK representative.

MISUSE OF EQUIPMENT

Suitability for Application

The unit is intended for cooling water or glycol solutions and is not suitable for purposes other than those specified in these instructions. Any use of the equipment other than its intended use, or operation of the equipment contrary to the relevant procedures may result in injury to the operator, or damage to the equipment.

The unit must not be operated outside the design parameters specified in this manual.

Structural Support

Structural support of the unit must be provided as indicated in these instructions. Failure to provide proper support may result in injury to the operator, or damage to the equipment and/or building.

Mechanical Strength

The unit is not designed to withstand loads or stresses from adjacent equipment, pipework or structures. Additional components must not be mounted on the unit. Any such extraneous loads may cause structural failure and may result in injury to the operator, or damage to the equipment.

General Access

There are a number of areas and features which may be a hazard and potentially cause injury when working on the unit unless suitable safety precautions are taken. It is important to ensure access to the unit is restricted to suitably qualified persons who are familiar with the potential hazards and precautions necessary for safe operation and maintenance of equipment containing high temperatures, pressures and voltages.

Pressure Systems

The unit contains refrigerant vapor and liquid under pressure, release of which can be a danger and cause injury. The user should ensure that care is taken during installation, operation and maintenance to avoid damage to the pressure system. No attempt should be made to gain access to the component parts of the pressure system other than by suitably trained and qualified personnel.

Electrical

The unit must be grounded. No installation or maintenance work should be attempted on the electrical equipment without first switching OFF, isolating and locking-off the power supply. Work on live equipment must only be carried out by suitably trained and qualified personnel. No attempt should be made to gain access to the control panel or electrical enclosures during normal operation of the unit.

Rotating Parts

Fan guards must be fitted at all times and not removed unless the power supply has been isolated. If ductwork is to be fitted, requiring the wire fan guards to be removed, alternative safety measures must be taken to protect against the risk of injury from rotating fans.

Sharp Edges

e finning on the air cooled condenser coils has sharp metal edges. Reasonable care should be taken when working in contact with the coils to avoid the risk of minor abrasions and lacerations. The use of gloves is recommended.

Refrigerants and Oils

Refrigerants and oils used in the unit are generally non-toxic, non-flammable and non-corrosive, and pose no special safety hazards. Use of gloves and safety glasses are, however, recommended when working on the unit. The build up of refrigerant vapor, from a leak for example, does pose a risk of asphyxiation in confined or enclosed spaces and attention should be given to good ventilation. For more comprehensive information on safety precautions for use of refrigerants and oils, refer to the Materials Safety Data tables provided on pages 9 through 11.

High Temperature and Pressure Cleaning

High temperature and pressure cleaning methods (e.g. steam cleaning) should not be used on any part of the pressure system as this may cause operation of the pressure relief device(s). Detergents and solvents which may cause corrosion should also be avoided.

EMERGENCY SHUTDOWN

In case of emergency the electrical option panel is fitted with an emergency stop switch CB1 (Circuit Breaker 3), located in the bottom right of the Microprocessor Panel. Separate Circuit Breakers, CB1 (System 1) and CB2 (System 2) can also be used to stop the respective system in an emergency. When operated, it removes the electrical supply from the control system, thus shutting down the unit.

MATERIAL SAFETY DATA

REFRIGERANT DATA:

SAFETY DATA	R22
Toxicity	Low.
In Contact With Skin	Liquid splashes or spray may cause freeze burns. Unlikely to be hazardous by skin absorption. R22 may be slightly irritant and liquid has a degreasing effect. Thaw affected areas with water. Remove contaminated clothing carefully - may adhere to skin in case of freeze burns. Wash affected areas with plenty of warm water. If symptoms occur (irritation or blistering) obtain medical attention.
In Contact With Eyes	Vapor has no effect. Liquid splashes or spray may cause freeze burns. Immediately irrigate with eyewash solution or clean water for at least 10 minutes. Obtain immediate medical attention.
Ingested	Highly unlikely to occur - but should this occur freeze burn will occur. Do not induce vomiting. Provided patient is conscious, wash mouth with water and give about (0.5 pint)250 ml to drink. Obtain immediate medical attention.
Inhalation	High levels of vapor concentration initially produce stimulation and then depression of the central nervous system causing headaches and giddiness and may lead to unconsciousness. Can prove suddenly fatal if the exposure has been severe.
	At higher concentration there is a danger from asphyxiation due to reduced oxygen content of atmosphere. Remove patient to fresh air, keep warm and at rest. Administer oxygen if necessary. Apply artificial respiration if breathing has ceased or shows signs of failing. In event of cardiac arrest apply external cardiac massage. Obtain immediate medical attention.
Further Medical Advice	Symptomatic and supportive theory is indicated. Cardiac sensitization has been described which may, in the presence of circulating catecholamines such as adrenaline, give rise to cardiac arrythmias and subsequent arrest following exposure to high concentrations.
Long Term Exposure	A lifetime inhalation study in rats and mice gives a small excess in salivary gland tumors in male rats only at 50,000 ppm, 10,000 ppm showed no effect. This information suggests that R22 does not represent a carcinogenic hazard to humans.
Occupational Exposure Limits	Recommended limit: 1000 ppm v/v - 8 hr TWA 1250 ppm v/v - 12 hr TWA.
Stability	Unstable.
Conditions to Avoid	Use in presence of naked flames, red hot surfaces and high moisture levels.
Hazardous Reactions	May react violently with sodium, potassium, barium and all other alkali and alkaline earth metals. Incompatible materials: Magnesium and alloys containing more than 2% magnesium.
Hazardous Decomposition Products	Halogen acids formed by thermal decomposition.
General Precautions	Avoid inhalation of high concentrations of vapors. Atmospheric concentrations should be minimized and kept as low as reasonably practicable below the occupational exposure limit. The vapor is heavier than air and collects at low level and in confined areas. Ventilate by extraction at lowest levels.
Respiratory Protection	Where doubt exists on atmospheric concentration, HSE approved breathing apparatus should be worn. This should be self-contained or of the long breather type.
Storage	Keep containers dry and in a cool place away from fire risk, direct sunlight, and all sources of heat such as radiators. Keep at temperatures not exceeding 113°F (45°C).
Protective Clothing	Wear overalls, impervious gloves and goggles/face protection.
Spill / leak Procedure	Ensure suitable personal protective clothing and respiratory protection is worn. Provided it is safe to do so, isolate the source of the leak. Allow small spillages to evaporate provided there is suitable ventilation. Large spillages: Ventilate area. Contain spillages with sand, earth or any suitable absorbent material. Prevent liquid from entering drains, sewers, basements and work pits since vapor may create a suffocating atmosphere.
Disposal	Best to recover and recycle. If this is not possible, destruction is to be in an approved facility which is equipped to absorb and neutralize acids and other toxic processing products.
Fire Extinguishing Data	Non-flammable.
Containers	Fire exposed containers should be kept cool with water sprays. Containers may burst if overheated.
Fire Fighting Protective Equip.	Self contained breathing apparatus and protective clothing must be worn in fire conditions.

MATERIAL SAFETY DATA

;tion 1 – PRODUCT NAME AND INFORMATION

Product (Trade Name and Synonyms):	YORK "L" Oil
Chemical Name:	Ester
Chemical Family:	Polyol Ester
Formula:	Proprietary
CAS#:	Proprietary

Section 2 – COMPONENTS AND HAZARD STATEMENT

This product is non-hazardous. The product contains no known carcinogens. No special warning labels are required under OSHA 29 CFR 1910.1200.

Section 3 – SAFE HANDLING AND STORAGE

Handling - Do not take internally. Avoid contact with skin, eyes, and clothing. Upon contact with skin, wash with soap and water. Flush eyes with water for 15 minutes and consult physician. Wash contaminated clothing before reuse.

Storage - Keep container tightly sealed when not in use. Product is hygroscopic. Storage under nitrogen highly recommended.

Section 4 – PHYSICAL DATA

Appearance:	Clear liquid, gray to yellow or light brown tint
Boiling Point:	> 650°F
Vapor Pressure:	<0.01 mmHg @ 20°C
Specific Gravity (water=1):	0.94-0.97
Volatiles, Percent by Volume:	0%
Odor:	Mild, distinct
Solubility in Water:	Negligible
Evaporation Rate (butyl acetate=1):	Nil

Section 5 – FIRE AND EXPLOSION HAZARDS

Flash Point (by Cleveland Open Cup):	230-300°C
Flammable Limits:	Not Established
Autoignition Temperature: no data	
HMIS Ratings:	
Health:	0
Flammability:	1
Reactivity:	0
Extinguishing Media:	Dry chemical; $C0_2$ foam; water fog (see below)
Unusual Fire and Explosion Hazards:	None
Special Fire Fighting Techniques:	Burning fluid may evolve irritating/noxious fumes. Firefighters should use NIOSH/MNSA-approved self-contained breathing apparatus. Use water fog to cool fire-exposed containers. USE WATER CAREFULLY NEAR EXPOSED/BURNING LIQUIDS. May cause frothing and splashing of hot materials.

Section 6 – REACTIVITY DATA

Stability: Stable
Hazardous Polymerization: Will not occur
Incompatible Materials: Strong oxidizers, caustic or acidic solutions
Conditions to Avoid: Excessive heat
Hazardous Decomposition Products: Analogous compounds evolve carbon monoxide, carbon dioxide, and other unidentified fragments when burned. See Section 5.

This product may degrade some paints and rubber materials.

Section 7 – HEALTH HAZARD DATA

Threshold Limit Value: Not established
Situations to Avoid: Avoid breathing oil mists
First Aid Procedures:
Ingestion: Consult physician at once. May cause nausea and diarrhea.
Inhalation: Product is not toxic by inhalation. If oil mist is inhaled, remove to fresh air and consult physician.

To the best of our knowledge, the toxicological properties of these compounds have not been fully investigated. Analogous compounds are considered to be essentially non-toxic.

Section 8 – PERSONAL PROTECTION INFORMATION

Respiratory Protection: Use in well ventilated area
Ventilation: Local exhaust
Protective Gloves: Strongly recommended, especially for prolonged exposure.
Eye/Face Protection: Goggles

Firefighters should use NIOSH/MNSA-approved self-contained breathing apparatus. Use water fog to cool fire-exposed containers. USE WATER CAREFULLY NEAR EXPOSED/BURNING LIQUIDS. May cause frothing and splashing of hot material.

Section 9 – SPILL OR LEAK PROCEDURES

In Case of Spill: Wear suitable protective equipment, especially goggles. Stop source of spill. Dike spill area. Use absorbent materials to soak up fluid (i.e. sand, sawdust, and commercially available materials). Wash spill area with large amounts of water. Properly dispose of all materials.

Section 10 – WASTE DISPOSAL METHODS

Incinerate this product and all associated wastes in a licensed facility in accordance with Federal, State, and local regulations.

The information in this material safety data sheet should be provided to all who use, handle, store, transport, or are otherwise exposed to this product. CPI believes the information in this document to be reliable and up to date as of the date of publication, but makes no guarantee that it is.

PRODUCT DESCRIPTION

1 System Fans
2 System 1 Power Panel
3 System 2 Power Panel
4 Control Panel
5 Power Entry
6 System 1 Compressor
7 Cooler
8 System 2 Compressor
9 System 1 Condenser
10 Option Box

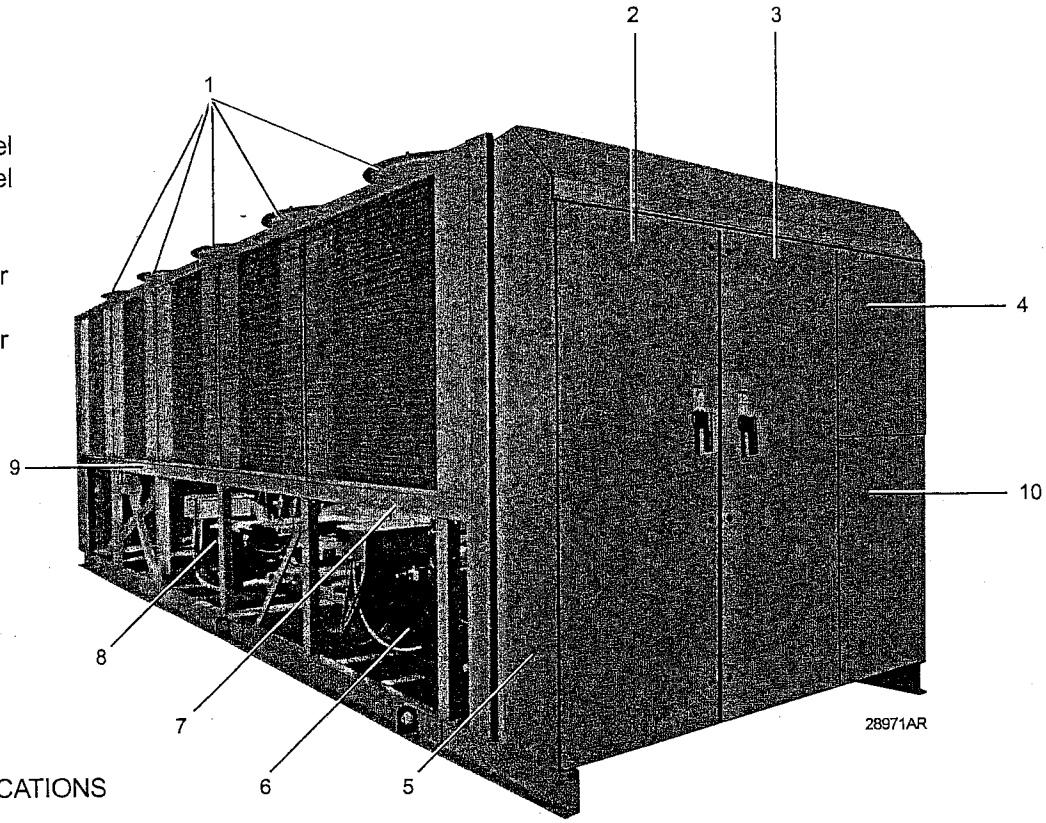

G. 1 – COMPONENT LOCATIONS

INTRODUCTION

YORK YCAS *Millennium* chillers are designed for water or water-glycol cooling. All units are designed to be located outside on the roof of a building or at ground level.

The units are completely assembled with all interconnecting refrigerant piping and internal wiring, ready for field installation.

Prior to delivery, the unit is pressure tested, evacuated, and fully charged with refrigerant and oil in each of the two independent refrigerant circuits. After assembly, an operational test is performed with water flowing through the cooler to ensure that each refrigerant circuit operates correctly.

The unit structure is manufactured from heavy gauge, galvanised steel. All external structural parts are coated with "Desert Sand" baked-on enamel powder paint. This provides a finish which, when subjected to ASTM B117, 00 hour, 5% salt spray conditions, shows breakdown of ess than 1/8" either side of a scribed line (equivalent to ASTM D1654 rating of "6").

All exposed power wiring is be routed through liquid-tight, non-metallic conduit.

General Description

The Air Cooled Screw Chiller utilizes many components which are the same or nearly the same as a standard reciprocating chiller of a similar size. This includes modular frame rails, condenser, fans and evaporator.

The chiller consists of 2, 3 or 4 screw compressors in a corresponding number of separate refrigerant circuits, a single shell and tube DX evaporator, economizers, an air cooled condenser, and expansion valves.

Compressor

The semi-hermetic rotary twin-screw compressor is designed for industrial refrigeration applications and ensures high operational efficiencies and reliable performance. Capacity control is acheived through a single slide valve. The compressor is a positive displacement type characterized by two helically grooved rotors which are manufactured from forged steel. The 60 Hz motor operates at 3550 RPM to direct drive the male rotor which in turn drives the female rotor on a light film of oil.

Refrigerant gas is injected into the void created by the unmeshing of the five lobed male and seven lobed female rotor. Further meshing of the rotors closes the rotor threads to the suction port and progressively compresses the gas in an axial direction to the discharge port. The gas is compressed in volume and increased in pressure before exiting at a designed volume at the discharge end of the rotor casing. Since the intake and discharge cycles overlap, a resulting smooth flow of gas is maintained.

The rotors are housed in a cast iron compressor housing precision machined to provide optimal clearances for the rotors. Contact between the male and female rotor is primarily rolling on a contact band on each of the rotor's pitch circle. This results in virtually no rotor wear and increased reliability, a trademark of the screw compressor.

The compressor incorporates a complete anti-friction bearing design for reduced power input and increased reliability. Four separated, cylindrical, roller bearings handle radial loads. Angular-contact ball bearings handle axial loads. Together they maintain accurate rotor positioning at all pressure ratios, thereby minimizing leakage and maintaining efficiency. A springless check valve is installed in the compressor discharge housing to prevent compressor rotor backspin due to system refrigerant pressure gradients during shutdown.

Motor cooling is provided by suction gas from the evaporator flowing across the motor. Redundant overload protection is provided using both thermistor and current overload protection.

The compressor is lubricated by removing oil from the refrigerant using an external oil separator. The pressurized oil is then cooled in the condenser coils and piped back to the compressor for lubrication. The compressor design working pressure is 450 PSIG (31 bar). Each chiller receives a 300 PSIG (21 bar) low side and a 450 PSIG (31 bar) high side factory test. A 500 watt (115-1-60) immersion heater is located in the compressor. The heater is temperature activated to prevent refrigerant condensation.

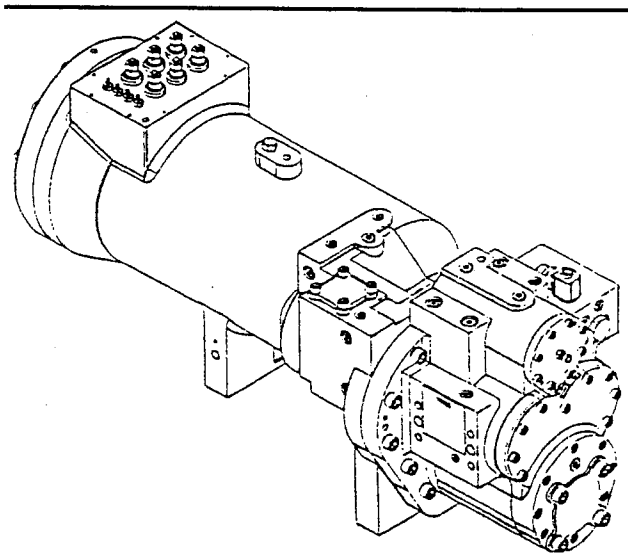

LD03674

FIG. 2 – SCREW COMPRESSOR

The following items are also included:

An acoustically tuned, internal discharge muffler to minimize noise, while operating flow for maximum performance.

Discharge and suction shutoff valves.

A rain-tight terminal box.

A suction gas screen and servicable, 0.5 micron full flow oil filter within the compressor housing.

Cooler

The system uses a Shell and Tube type Direct Expansion Evaporator. Each of the refrigerant circuits consists of 4 passes with the chilled liquid circulating back and forth across the tubes from one end to the other.

The design working pressure of the cooler on the shell side is 150 PSIG (10 bar), and 300 PSIG (20 bar) for the tube (refrigerant side). The water baffles are fabricated from galvanized steel to resist corrosion. Removable heads are provided for access to internally enhanced, seamless, copper tubes. Water vent and drain connections are included.

The cooler is equipped with a thermostatically controlled heater for protection to –20°F (–29°C) ambient and insulated with flexible closed-cell foam.

The water nozzles are provided with grooves for mechanical couplings and should be insulated by the contractor after pipe installation.

Condenser

The fin and tube condenser coils are manufactured from seamless, internally enhanced, high condensing coefficient, corrosion resistant copper tubes arranged in staggered rows and mechanically expanded into corrosion resistant aluminum alloy fins with full height fin collars. They have a design working pressure of 450 PSIG (31 bar).

Multiple fans move air through the coils. They are dynamically and statically balanced, direct drive with corrosion resistant glass fiber reinforced composite blades molded into low noise, full airfoil cross section, providing vertical air discharge from extended orifices for efficiency

and low sound. Each fan is located in a separate compartment to prevent cross flow during fan cycling. Guards of heavy gauge, PVC coated galvanized steel are provided.

The fan motors are high efficiency, direct drive, 6 pole, 3 phase, Class-"F", current overload protected, totally enclosed (TEAO) type with double sealed, permanently lubricated ball bearings.

Economizer

(Models 0140, 0150, 0170, 0180, 0210, and 0230)

A plate and frame heat exchanger (economizer) is fitted to both refrigerant circuits on models 0140, 0180 and 0230 and circuit 2 only on models 0150, 0170 and 0210. This increases the efficiency of the system by subcooling the primary refrigerant liquid to the evaporator.

The wet vapor to the economizer is supplied by a small 15 ton TXV set for 10°F (5.5°C) superheat that flashes off 10- 20% of the liquid from the condenser. 10-12 tons are utilized for subcooling liquid refrigerant. The wet vapor is at an intermediate pressure between discharge and suction (1.7 x suction) and therefore little energy is required to pump it back through the compressor to condenser pressure. This results in a very small loss to system efficiency.

The economizer provides approximately 25°F (14°C) of additional subcooling to the liquid refrigerant which flows to the evaporator at 95°F (35°C) ambient, 55°F (13°C) RWT, 44°F (7°C) LWT. Subcooling will drop to approximately 0°F below 90°F (32°C) ambient. The subcooled liquid is then fed to the primary TXV in the system. This additional subcooling results in a significant increase in the efficiency of the system. The design working pressure of the economizer is 450 PSIG (31 bar). The economizer liquid supply solenoid is activated on start-up coincident with the liquid line solenoid, after pumpdown.

The economizer operation is controlled by the economizer solenoid valve. This valve is controlled by the microprocessor. The valve will remain off for the first 3 minutes of compressor operation. After 3 minutes of operation, the economizer solenoid valve will open if the slide valve position is > Step 47, and the pressure ratio (PR) of discharge pressure to suction pressure is greater than 2.2 using the following formula:

English: $$PR = \frac{DP\,(PSIG) + 14.7}{SP\,(PSIG) + 14.7}$$

Metric: $$PR = \frac{DP\,(BAR) + 1}{SP\,(BAR) + 1}$$

The economizer valve will be turned off if the pressure ratio drops below 2.0. It will also turn off if slide valve position drops below Step 44. Under these conditions, the valve is closed due to the lack of efficiency improvement available from the economizer.

Oil Separator / System

The external oil separator, with no moving parts and designed for minimum oil carry-over, is mounted in the discharge line of the compressor. The high pressure discharge gas is forced around a 90 degree bend. Oil is forced to the outside of the separator through centrifugal action and captured on wire mesh where it drains to the bottom of the oil separator and into the compressor.

The oil (YORK "L" oil - a POE oil used for all refrigerant applications), which drains back into the compressor through a replaceable 0.5 - 3.0 micron oil filter, and oil supply solenoid, is at high pressure. This high pressure "oil injection" forces the oil into the compressor where it is gravity fed to the gears and bearings for lubrication. After lubricating the gears and bearings, it is injected through orifices on a closed thread near the suction end of the rotors. The oil is automatically injected because of the pressure difference between the discharge pressure and the reduced pressure at the suction end of the rotors. This lubricates the rotors as well as provides an oil seal against leakage around the rotors to assure refrigerant compression (volumetric efficiency). The oil also provides cooling by transferring much of the heat of compression from the gas to the oil keeping discharge temperatures down and reducing the chance for oil breakdown. Oil injected into the rotor cage flows into the rotors at a point about 1.2x suction. This assures that a required minimum differential of at least 30 PSID exists between discharge and 1.2x suction, to force oil into rotor case, a minimum of 10 PSID (0.6 bar) is all that is required to assure protection of the compressor. Oil pressure is measured as the difference discharge pressure and the pressure of the oil entering the rotor case.

Maximum working pressure of the oil separator is 450 PSIG (31 bar). A relief valve is installed in the oil separator piping. This will soon be incorporated into the oil separator. Oil level should be above the midpoint of the "lower" oil sight glass when the compressor is running. Oil level should not be above the top of the "upper" sight glass. Oil temperature control is provided through liquid injection activated by the microprocessor, utilizing a discharge temperature sensor, and a solenoid valve.

Oil Cooling

Oil cooling is provided by routing oil from the oil separator through several rows of the condenser coils and back to the compressor.

Capacity Control

The compressors will start at the minimum load position and provide a capacity control range from 10% - 100% of the full unit load using a continuous function slide valve. The microprocessor controlled output pressure regulating capacity control valve will command compressor capacity independent of control valve input pressure and balance the compressor capacity with the cooling load.

The automatic spring return of the capacity control valve to the minimum load position will ensure compressor starting at minimum motor load.

Power and Control Panel

All controls and motor starting equipment are factory wired and function tested. The panel enclosures are designed to IP55 and are manufactured from powder painted galvanized steel.

The Power and Control Panel are divided into power sections for each compressor and associated fans, a control section and an electrical options section. The power and control sections have separate hinged, latched, and gasket sealed doors equipped with wind struts.

Each power compartment contains:
Compressor and fan starting contactors, fan motor external overloads, control circuit serving compressor capacity control, compressor and fan contactor coils and compressor motor overloads.

The current transformers for the compressor motor overloads sense each phase, as an input to the microprocessor. This protects the compressor motors from damage due to: low current input, high input current, unbalanced current, single phasing, phase reversal, and compressor locked rotor.

The control section contains:
ON/OFF switch, microcomputer keypad and display, microprocessor board, I/O expansion board, relay boards and power supply board.

The options sections contain:
A control circuit transformer complete with service switch providing 115/1Ø power to the unit control system.

Electrical options as described in "Accessories and Options".

Microprocessor Controls

The microprocessor has the following functions and displays:

A liquid crystal 40 character display with text provided on two lines and light emitting diode backlighting outdoor viewing.

A color coded, 35 button, sealed keypad with sections for Display, Entry, Setpoints, Clock, Print, Program and Unit ON/OFF.

The standard controls shall include: brine chilling thermal storage, automatic pump down, run signal contacts, demand load limit from external building automation system input, remote reset liquid temperature reset input, unit alarm contacts, chilled liquid pump control, automatic reset after power failure, automatic system optimization to match operating conditions.

The software is stored in non-volatile memory (EPROM) to eliminate chiller failure due to AC power failure. The Programmed Setpoint is stored in lithium battery backed memory.

Motor Current Protection

The microprocessor motor protection provides high current protection to assure that the motor is not damaged due to voltage, excess refrigerant, or other problems that could cause excessive motor current. This is accomplished by sending 3 phase current signals proportional to motor current from the Motor Protector module to the Power Supply Board where the signals are conditioned and routed to the I/O Expansion board to be multiplexed and sent to the Microprocessor Board. If the motor current exceeds the 115% FLA trip point after 3 seconds of operation on either Wye-Delta or ACL starters, the micro will shut the system down and lock it out after one fault. A manual reset of the respective system switch is required to clear the fault and restart the system. A thorough check of the motor, wiring, and refrigerant system should be done before restarting a system that has faulted on high motor current.

The micro also provides low motor current protection when it senses a motor current less than 10% FLA. The micro will shut the system down whenever low motor current is sensed and will lock out a system if three faults occur in 90 minutes. Low motor current protection is activated 4 seconds after start on both Wye-Delta and ACL starters to assure the motor starts, the system doesn't run without refrigerant, the motor protector is not tripped, and the mechanical high pressure cut-out is not tripped. Once the system is locked out on Low Motor Current, it must be manually reset with the system switch. See also Motor Protection Module section on page 16.

The micro senses low motor current whenever a HPCO or Motor Protector contact opens. This occurs because the MP and HPCO contacts are in series with the motor contactor. Whenever either of these devices are open,

the contactor de-energizes and the motor shuts down. Since the micro is sending a run signal to the contactor, it senses the low motor current below 10% FLA and shuts the system down.

Motor Protector Module

The mechanical motor protector is a Texas Instruments 2ACE Three Phase Protection Module (Fig. 42, page 97) thermal and current motor overload protection. This module protects against phase to phase current imbalance, over current, under current, and phase rotation. The module, mounted in the power panel, utilizes a 7 segment display which provides operating status and fault diagnostic information. The 7 segment display will display either a stationary or a flashing alphanumeric value which can be decoded by the operator. A list of the codes is shown below:

0	Normal - no fault detected
Flashing "0"	Motor off or unloaded < 5A AC current level.
1	High current fault.
2	Loaded phase to phase current imbalance ≥ 17%.
3	Unloaded phase to phase current imbalance ≥ 25%.
4	Improper incoming phase rotation.
5	High motor temperature. Trip point = 13kΩ, reset = 3.25kΩ.
6	Communication error.
E	Out of range of RLA calibration.
Other symbols	Defective module or supply voltage.
Working voltage	18-30 VAC, 224 VAC nominal.
Low voltage trip	= 15 VAC.

Whenever a motor protector trips, the motor protector contacts wired in series with the motor contacts opens and the motor contactor de-energizes allowing the motor to stop. The micro senses the low motor current and shuts the system down. The micro will try two more starts before locking the system out. The system locks out because the motor protector is a manual reset device. After the first start the modules' contacts will be open preventing the motor contactors from energizing. Power must be removed and reapplied to reset the module.

Current Overload

The module design uses one integral current transformer per phase to provide protection against rapid current overload conditions. The module responds to changes in current and must be calibrated using DIP switches located on the module. Integral trip curves allow for in-rush currents during Wye-Delta, part wind, or ACL starts without nuisance tripping.

To check the factory setting of the current overload tripping value, obtain the RLA from the motor nameplate. For an Across the Line start, the trip setting should be 1.35 * RLA. For a Wye-Delta start, the trip setting should be 0.78 * RLA. Use the equations given to determine the overload value that should have been programmed, and check that the DIP switches are in the correct position using Table 1 (pages 17-20).

Thermal Overload

Three PTC (positive temperature coefficient) thermistors in the motor windings of each phase provides thermal protection. The sensor resistance stays relatively constant at 1kΩ until a temperature of 266°F (130°C) is sensed. The sensor experiences a rapid rise in resistance beyond this temperature. Whenever the resistance of one of the sensors reaches 13kΩ, the module trips, which ultimately de-energizes the motor's pilot circuit. Reset is manual after the motor cools and the sensor resistance drops to 3.25kΩ.

Current Unbalance (Loaded & Unloaded)/Loss of Phase

A 2 second delay at start-up allows for any unbalances resulting during normal starting conditions. After this initial delay, the 2ACE module compares the "Operating Current" to the measured half line current. The "Operating Current" is given by 0.65 * factory overload current setting.

An *unloaded compressor condition* occurs when any measured half line current is less than the "Operating Current." A current unbalance exceeding an unloaded level of 25% will result in the motor pilot circuit being de-energized.

A *loaded compressor condition* occurs when any measured half line current is greater than or equal to the "Operating Current." A current unbalance exceeding a loaded level of 17% will result in the motor pilot circuit being de-energized.

Unbalance is defined as
(High Phase - Low Phase)/High Phase

Improper Phase Sequence

The 2ACE module calculates the phase sequence at start-up using the three current transducers to determine whether the three phase sequence on the load side of the main contactor is miswired. Upon detection of a miswired motor load, the module will deenergize the main contactor pilot circuit within 50 millisecond response time.

TABLE 1 – MOTOR PROTECTOR DIP SWITCH SETTING

RLA		MP OL VALUE SET	DIP SWITCH SETTINGS ON MP							
A/L	Y-D		128	64	32	16	8	4	2	1
44	77	60	0	0	1	1	1	1	0	0
45	78	61	0	0	1	1	1	1	0	1
46	79	62	0	0	1	1	1	1	1	0
47	80	63	0	0	1	1	1	1	1	1
47	82	64	0	1	0	0	0	0	0	0
48	83	65	0	1	0	0	0	0	0	1
49	84	66	0	1	0	0	0	0	1	0
50	86	67	0	1	0	0	0	0	1	1
50	87	68	0	1	0	0	0	1	0	0
51	88	69	0	1	0	0	0	1	0	1
52	89	70	0	1	0	0	0	1	1	0
53	91	71	0	1	0	0	0	1	1	1
53	92	72	0	1	0	0	1	0	0	0
54	93	73	0	1	0	0	1	0	0	1
55	95	74	0	1	0	0	1	0	1	0
56	96	75	0	1	0	0	1	0	1	1
56	97	76	0	1	0	0	1	1	0	0
57	98	77	0	1	0	0	1	1	0	1
58	100	78	0	1	0	0	1	1	1	0
59	101	79	0	1	0	0	1	1	1	1
59	102	80	0	1	0	1	0	0	0	0
60	103	81	0	1	0	1	0	0	0	1
61	105	82	0	1	0	1	0	0	1	0
61	106	83	0	1	0	1	0	0	1	1
62	107	84	0	1	0	1	0	1	0	0
63	109	85	0	1	0	1	0	1	0	1
64	110	86	0	1	0	1	0	1	1	0
64	111	87	0	1	0	1	0	1	1	1
65	112	88	0	1	0	1	1	0	0	0
66	114	89	0	1	0	1	1	0	0	1
67	115	90	0	1	0	1	1	0	1	0
67	116	91	0	1	0	1	1	0	1	1
68	117	92	0	1	0	1	1	1	0	0
69	119	93	0	1	0	1	1	1	0	1
70	120	94	0	1	0	1	1	1	1	0
70	121	95	0	1	0	1	1	1	1	1
71	123	96	0	1	1	0	0	0	0	0
72	124	97	0	1	1	0	0	0	0	1
73	125	98	0	1	1	0	0	0	1	0
73	126	99	0	1	1	0	0	0	1	1
74	128	100	0	1	1	0	0	1	0	0
75	129	101	0	1	1	0	0	1	0	1

TABLE 1 – (CONT'D) MOTOR PROTECTOR DIP SWITCH SETTING

RLA		MP OL VALUE SET	DIP SWITCH SETTINGS ON MP							
A/L	Y-D		128	64	32	16	8	4	2	1
76	130	102	0	1	1	0	0	1	1	0
76	132	103	0	1	1	0	0	1	1	1
77	133	104	0	1	1	0	1	0	0	0
78	134	105	0	1	1	0	1	0	0	1
79	135	106	0	1	1	0	1	0	1	0
79	137	107	0	1	1	0	1	0	1	1
80	138	108	0	1	1	0	1	1	0	0
81	139	109	0	1	1	0	1	1	0	1
81	140	110	0	1	1	0	1	1	1	0
82	142	111	0	1	1	0	1	1	1	1
83	143	112	0	1	1	1	0	0	0	0
84	144	113	0	1	1	1	0	0	0	1
84	146	114	0	1	1	1	0	0	1	0
85	147	115	0	1	1	1	0	0	1	1
89	148	116	0	1	1	1	0	1	0	0
87	149	117	0	1	1	1	0	1	0	1
87	151	118	0	1	1	1	0	1	1	0
88	152	119	0	1	1	1	0	1	1	1
89	153	120	0	1	1	1	1	0	0	0
90	155	121	0	1	1	1	1	0	0	1
90	156	122	0	1	1	1	1	0	1	0
91	157	123	0	1	1	1	1	0	1	1
92	158	124	0	1	1	1	1	1	0	0
93	160	125	0	1	1	1	1	1	0	1
93	161	126	0	1	1	1	1	1	1	0
94	162	127	0	1	1	1	1	1	1	1
95	163	128	1	0	0	0	0	0	0	0
96	165	129	1	0	0	0	0	0	0	1
96	166	130	1	0	0	0	0	0	1	0
97	167	131	1	0	0	0	0	0	1	1
98	169	132	1	0	0	0	0	1	0	0
99	170	133	1	0	0	0	0	1	0	1
99	171	134	1	0	0	0	0	1	1	0
100	172	135	1	0	0	0	0	1	1	1
101	174	136	1	0	0	0	0	0	0	0
101	175	137	1	0	0	0	0	0	0	1
102	176	138	1	0	0	0	0	0	1	0
103	178	139	1	0	0	0	0	0	1	1
104	179	140	1	0	0	0	0	1	0	0
104	180	141	1	0	0	0	0	1	0	1
105	181	142	1	0	0	0	0	1	1	0
106	183	143	1	0	0	0	0	1	1	1

TABLE 1 – (CONT'D) MOTOR PROTECTOR DIP SWITCH SETTING

RLA		MP OL VALUE SET	DIP SWITCH SETTINGS ON MP							
A/L	Y-D		128	64	32	16	8	4	2	1
107	184	144	1	0	0	1	1	0	0	0
107	185	145	1	0	0	1	1	0	0	1
108	186	146	1	0	0	1	1	0	1	0
109	188	147	1	0	0	1	1	0	1	1
110	189	148	1	0	0	1	1	1	0	0
110	190	149	1	0	0	1	1	1	0	1
111	192	150	1	0	0	1	1	1	1	0
112	193	151	1	0	0	1	1	1	1	1
113	194	152	1	0	0	1	1	0	0	0
113	195	153	1	0	0	1	1	0	0	1
114	197	154	1	0	0	1	1	0	1	0
115	198	155	1	0	0	1	1	0	1	1
116	199	156	1	0	0	1	1	1	0	0
116	201	157	1	0	0	1	1	1	0	1
117	202	158	1	0	0	1	1	1	1	0
118	203	159	1	0	0	1	1	1	1	1
119	204	160	1	0	1	0	0	0	0	0
119	206	161	1	0	1	0	0	0	0	1
120	207	162	1	0	1	0	0	0	1	0
121	208	163	1	0	1	0	0	0	1	1
121	209	164	1	0	1	0	0	1	0	0
122	211	165	1	0	1	0	0	1	0	1
123	212	166	1	0	1	0	0	1	1	0
124	213	167	1	0	1	0	0	1	1	1
124	215	168	1	0	1	0	1	0	0	0
125	216	169	1	0	1	0	1	0	0	1
126	217	170	1	0	1	0	1	0	1	0
127	218	171	1	0	1	0	1	0	1	1
127	220	172	1	0	1	0	1	1	0	0
128	221	173	1	0	1	0	1	1	0	1
129	222	174	1	0	1	0	1	1	1	0
130	223	175	1	0	1	0	1	1	1	1
130	225	176	1	0	1	1	0	0	0	0
131	226	177	1	0	1	1	0	0	0	1
132	227	178	1	0	1	1	0	0	1	0
133	229	179	1	0	1	1	0	0	1	1
133	230	180	1	0	1	1	0	1	0	0
134	231	181	1	0	1	1	0	1	0	1
135	232	182	1	0	1	1	0	1	1	0
136	234	183	1	0	1	1	0	1	1	1
136	235	184	1	0	1	1	1	0	0	0
137	236	185	1	0	1	1	1	0	0	1

TABLE 1 – (CONT'D) MOTOR PROTECTOR DIP SWITCH SETTING

RLA		MP OL VALUE SET	DIP SWITCH SETTINGS ON MP							
A/L	Y-D		128	64	32	16	8	4	2	1
138	238	186	1	0	1	1	1	0	1	0
139	239	187	1	0	1	1	1	0	1	1
139	240	188	1	0	1	1	1	1	0	0
140	241	189	1	0	1	1	1	1	0	1
141	243	190	1	0	1	1	1	1	1	0
141	244	191	1	0	1	1	1	1	1	1
142	245	192	1	1	0	0	0	0	0	0
143	246	193	1	1	0	0	0	0	0	1
144	248	194	1	1	0	0	0	0	1	0
144	249	195	1	1	0	0	0	0	1	1
145	250	196	1	1	0	0	0	1	0	0
146	252	197	1	1	0	0	0	1	0	1
147	253	198	1	1	0	0	0	1	1	0
147	254	199	1	1	0	0	0	1	1	1
148	255	200	1	1	0	0	1	0	0	0
149	257	201	1	1	0	0	1	0	0	1
150	258	202	1	1	0	0	1	0	1	0
150	259	203	1	1	0	0	1	0	1	1
151	261	204	1	1	0	0	1	1	0	0
152	262	205	1	1	0	0	1	1	0	1
153	263	206	1	1	0	0	1	1	1	0
153	264	207	1	1	0	1	1	1	1	1
154	266	208	1	1	0	1	0	0	0	0
155	267	209	1	1	0	1	0	0	0	1
156	268	210	1	1	0	1	0	0	1	0
156	269	211	1	1	0	1	0	0	1	1
157	271	212	1	1	0	1	0	1	0	0
158	272	213	1	1	0	1	0	1	0	1
159	273	214	1	1	0	1	0	1	1	0
159	275	215	1	1	0	1	0	1	1	1
160	276	216	1	1	0	1	1	0	0	0
161	277	217	1	1	0	1	1	0	0	1
161	278	218	1	1	0	1	1	0	1	0
162	280	219	1	1	0	1	1	0	1	1
163	281	220	1	1	0	1	1	1	0	0
164	282	221	1	1	0	1	1	1	0	1
164	284	222	1	1	0	1	1	1	1	0
165	285	223	1	1	0	1	1	1	1	1
166	286	224	1	1	1	0	0	0	0	0
167	287	225	1	1	1	0	0	0	0	1

MOTOR STARTING

Two types of compressor motor starting are available: Across-the-line and optional Wye-Delta Open Transition Starter.

Across-the-line starters will utilize one contactor and one start relay per compressor. The optional Wye-Delta starter utilizes 4 motor contactors, a transition delay relay, a start relay, and a start-wye relay.

The Wye-Delta start allows inrush current to be limited to approximately 33% LRA for the first 4 to 10 seconds, with current increasing to normal running current when the Delta connection is completed.

When the micro initiates a start signal at Terminal 20 to run a compressor, the 1CR (SYS 1) or 2CR (SYS 2) relay is energized. The transition of the 1CR (SYS 1) or 2CR (SYS 2) relay contacts energizes the 1S (SYS 1) or 2S (SYS 2) relay approx. 16ms later. The 1S/2S contacts in turn energize the 1M (SYS 1) or 3M (SYS 2) motor contacts 16ms later. This completes the "WYE" connection of the motor start. At the same time, the normally closed 1S/2S auxillary interlock contact opens preventing the 2M (SYS 1) or 4M (SYS 2) motor contactors from energizing. Auxillary contacts from 1M (SYS 1) or 3M (SYS 2) close, interlocking the 1M (SYS 1) or 3M (SYS 2) contactors, keeping them energized in parallel with 1S (SYS 1) or 2S (SYS 2).

The "WYE" connection of the motor start is enabled for 4 to 10 seconds depending upon motor current as sensed by the microprocessor. Normally, the transition to Delta takes 10 seconds if current is below 125% FLA. If motor current exceeds 125% FLA, the transition is made to Delta as long as the WYE has been enabed for at least 4 seconds.

After the "WYE" connection is enabled for 4 to 10 seconds, the 1TR (SYS 1) or 2TR (SYS 2) transition delay relay is enabled by the microprocessor from Terminal 9. The 1TR (SYS 1) or 2TR (SYS 2) contacts open, de-energizing 1S (SYS 1) or 2S (SYS 2). 1M (SYS 1) or 3M (SYS 2) remain energized through interlocking contacts 1M (SYS 1) or 3M (SYS 2). Opening of the 1TR (SYS 1) or 2TR (SYS 2) contacts closes the normally open 1S (SYS 1) or 2S (SYS 2) contacts, energizing motor contactor 2M (SYS 1) or 4M (SYS 2), completing the "DELTA" connection of the motor.

NOTE: 1 TR and 2TR are NOT "timing" relays.

KEYPAD CONTROLS

Display

Parameters are displayed in English (°F and PSIG) or Metric (°C and Bars) units, and for each circuit, the following items can be displayed:

Return and leaving chilled liquid, and ambient temperature.

Day, date and time. Daily start/stop times. Holiday and Manual Override status.

Compressor operating hours and starts. Automatic or manual lead/lag. Lead compressor identification.

Run permissive status. No cooling load condition. Compressor run status.

Anti-recycle timer and anti-coincident start timer status per compressor.

System suction (and suction superheat), discharge, and oil pressures and temperatures.

Percent full load compressor motor current per phase and average per phase. Compressor capacity control valve input steps.

Cutout status and set-points for: supply fluid temperature, low suction pressure, high discharge pressure and temperature, high oil temperature, low and high ambient, phase rotation safety, and low leaving liquid temperature.

Unloading limit setpoints for high discharge pressure and compressor motor current.

Liquid pull-down rate sensitivity (0.5°F to 5°F [0.3°C to 2.8°C] /minute in 0.1° increments).

Status of: evaporator heater, condenser fans, load and unload timers, chilled water pump.

"Out of range" message.

Up to 6 fault shut down conditions. (4 in YCAS 3 Compressor and YDAS Models).

The standard display language is English, with 4 other languages available.

Entry – Used to confirm Set Point changes, cancel inputs, advance day, and change AM/PM.

Set Points – For setting chilled liquid temperature, chilled liquid range, remote reset temperature range.

Clock – Used to set time, daily or holiday start/stop schedule and manual override for servicing.

Print – Used to display or print operating data or system fault shutdown history for last six faults. (4 in YCAS 3 Compressor and YDAS Models). Printouts through an RS-232 port via a separate printer.

Program

For setting low leaving liquid temperature cutout, 300 to 600 second anti-recycle timer, average motor current unload point, liquid temperature set-point reset signal from YORK ISN or building automation system.

Additional functions (password protected) for programming by a qualified service technician:

Cutouts for low and high ambient, low suction pressure and high discharge pressure, refrigerant type, high discharge pressure unload setpoint.

ACCESSORIES AND OPTIONS

Multiple Point Power Connection (Standard)

Standard field power wiring connection on all models is Multiple Point Power Connection. Field provided power supply circuits, with appropriate branch circuit protection, are connected to factory provided terminal blocks, non-fused disconnect switches or circuit breakers with lockable external handles located in the two power compartments.

Single Point Power Connection with Individual Circuit Protection

A single point supply circuit with field provided protection is connected to a factory provided terminal block or non-fused disconnect switch located in the options compartment. Factory wiring is provided from the terminal block or disconnect switch to factory supplied internal branch circuit breakers with lockable external handles in the power compartments.

Single Point Power Connection with Combined Circuit Protection

A single point supply circuit with field provided protection is connected to a factory provided circuit breaker with lockable external handle located in the options compartment. Factory wiring is provided from the circuit breaker to factory supplied terminal blocks in the power compartments.

Single Point Power Connection without Circuit Protection

A single point supply circuit with field provided protection is connected to a factory provided terminal block or non-fused disconnect switch located in the options compartment. Factory wiring is provided from the terminal block or disconnect switch to factory supplied terminal blocks in the power compartments.

Control Circuit Terminal Block

A 120V, 20A control circuit power terminal strip located in the control panel to accept a field provided control power supply, rather than the standard factory mounted control circuit transformer. The supply with appropriate branch circuit protection in accordance with applicable Local codes, provides the unit control circuit power supply via the panel mounted Emergency Stop Switch.

Building Automation System (BAS) Interface

Provides a means to reset the leaving chilled liquid temperature or percent full load amps (current limiting) from the BAS (Factory Mounted):

Printed circuit board to accept 4 to 20 mA, 0 to 10 Vdc, or dry contact closure input from the BAS.

A YORK ISN Building Automation System can provide a Pulse Width Modulated (PWM) signal direct to the standard control panel via the standard on-board RS485 port.

Condenser Coil Protection

The standard condenser coils have aluminium fins, copper tubes, and galvanized steel supports for generally adequate corrosion resistance. However, these materials are not adequate for all environments.

The following options provide added protection:

Black fin condenser coils - Condenser coils constructed using black epoxy coated aluminium fin stock for corrosion resistance comparable to copper fin coils in typical seashore locations.

Copper fin condenser coils – Coils constructed with corrosion resistant copper fins. Not recommended in areas where units may be exposed to acid rain.

Phenolic coated condenser coils – Completed condenser coil assemblies are covered with a cured Phenolic coating. Probably the most suitable selection for seashore locations where salt spray may come into contact with the fins, and other corrosive applications except: strong alkalis, oxidizers, and wet bromine, chlorine, and fluorine in concentrations greater than 100 PPM.

DX COOLER OPTIONS:

300 PSIG (21 bar) Waterside Design Working Pressure – The DX cooler waterside is designed and constructed for 300 PSIG (21 bar) working pressure. (Factory Mounted)

1-1/2" (38 mm) Insulation – Double thickness insulation provided for enhanced efficiency.

Flange Accessory – Consists of raised face flanges to convert grooved water nozzles to flanged cooler connections. Includes companion flanges for field mounting.

Remote DX Cooler

Includes the main condensing unit less the cooler, refrigerant and liquid line devices. The insulated cooler and field accessory kits per refrigerant circuit are supplied separately. The condensing unit and cooler are shipped with a nitrogen holding charge.

Flow Switch Accessory

Johnson Controls model F61MG-1C Vapor-proof SPDT, NEMA 4X switch, 150 PSIG (10 bar) DWP, -20°F to 250°F (-29°C to 121°C), with 1" NPT (IPS) connection for upright mounting in horizontal pipe. A flow switch must be field installed with each unit.

Star-Delta Compressor Motor Starter

Provides approximately 65% reduced inrush current compared to across-the-line start (Factory Mounted).

UNIT ENCLOSURES

Wire enclosure – Heavy gauge welded wire mesh guards mounted on the exterior of the unit (Factory or field mounted).

Louvered panels and wired guards – Louvered panels mounted over the exterior condenser coil faces, and heavy gauge welded wire mesh guards mounted around the bottom of the unit (Factory or field mounted).

Louvered panels (condenser coils only) – Louvered panels are mounted over the exterior condenser coil faces on the sides of the unit to visually screen and protect the coils (Factory or field mounted).

Louvered panels (full unit) enclosure – Louvered panels over condenser coils and around the bottom of the unit (Factory or field mounted).

FANS

High static fans: Fans and motors suitable for High External Static conditions to 100 Pa.

SOUND REDUCTION OPTIONS

Low speed fans – Reduced RPM fan motors and alternative fan selection for low noise applications.

Compressor sound enclosures – Acoustically treated metal compressor enclosures. Includes a compressor mounted temperature transducer to prevent overheating.

VIBRATION ISOLATION

Neoprene pad isolation – Recommended for normal installations. (Field mounted)

1" (25 mm) spring isolators – Level adjustable, spring and cage type isolators for mounting under the unit base rails (Field mounted).

2" (51 mm) seismic spring isolators – Restrained Spring-Flex Mountings incorporate welded steel housing with vertical and horizontal limit stops. Housings designed to withstand a minimum 1.0 g accelerated force in all directions to 2" (51 mm). Level adjustable, deflection may vary slightly by application. (Field mounted).

UNIT NOMENCLATURE
NAMEPLATE ENGINEERING DATA

BASIC PART NUMBER

YCAS0170EC40YFA

1 2 3 4 — BASE PRODUCT TYPE

- Y : YORK
- C : Chiller
- A : Air Cooled
- S : Screw

5 6 7 8 — NOMINAL CAPACITY

# # # #	Tons
	0130
	0140
	0150
	0160
	0170
	0180
	0200
	0210
	0230

9 — UNIT DESIGNATOR

- E High Efficiency

10 — REFRIGERANT

- C :R-22

11 12 13 — VOLTAGE/STARTER

11	12	
1	7	:200 / 3/ 60
2	8	:230 / 3 /60
4	0	:380 / 3/ 60
4	6	:460 / 3/ 60
5	8	:575 / 3/ 60

- 13: Y :Wye (Star)
- 13: X Delta
- 13: :Across the Line

14 15 — DESIGN/DEVELOPMENT LEVEL

- F A :Design Series F Engineering Change or PIN Level

OPTIONS SECTION OF PART NUMBER

16 17 18 19 — POWER FIELD

- M D : MP NF Disconnect Switches
- M B : MP Supply w/ Ind. Sys. Brkr & L. Ext. Handles
- B : SP Supply TB w/ Ind. Sys. Brkr. & L. Ext. Handles
- B : SP NF Disconct. w/ Ind. Sys. Brkr & L. Ext. Handles
- X : SP Supply TB
- S D : SP NF Disconnect Switch
- B X : SP Circuit Breaker w/ Lockable Handle
- 18: C : Control Circuit Power Terminal Strip
- 18: X: No Option

20 21 22 23 24 25 26 27 28 — CONTROLS FIELD

- 20: X
- 21: Y
- 21: C
- 21: B
- 22: M
- 22: S
- 22: F
- 22: G
- 23: X
- 24: L
- 24: C
- 25: X
- 26: P
- 27: R
- 28: S

- : No Option
- : BAS/EMS Temp Reset / Offset
- : BAS/EMS Current Reset / Offset
- : BAS/EMS Both Temp. & Current
- : Millennium Controls
- : Spanish LCD & Keypad Display
- : French LCD & Keypad Display
- : German LCD & Keypad Display
- : No Option
- : N Amer. Safety Code (cU.L./cETL)
- : European Safety Code (CE)
- : No Option
- : Pump Control
- : Remote Control Panel
- : Seq. Cntrl & Automatic Lead Trans.

29 30 31 32 33 34 35 36 37 — COMPRESSOR / PIPING FIELD

- 29 30: # # : No Option
- 29 30: T S : BAS/EMS Temp Reset / Offset
- 31: C : BAS/EMS Current Reset / Offset
- 31: D : BAS/EMS Both Temp. & Current
- 31: L : Millennium Controls
- 32: B : Spanish LCD & Keypad Display
- 33: X : French LCD & Keypad Display
- 34: X : German LCD & Keypad Display
- 35: X : No Option
- 36: X : N Amer. Safety Code (cU.L./cETL)
- 37: X : European Safety Code (CE)
- 37: B : No Option
- 37: C : Pump Control
- 37: D : Remote Control Panel
- 37: E : Seq. Cntrl & Automatic Lead Trans.
- 37: F
- 37: G
- 37: H

MP = Multiple Point
SP = Single Point
NF = Non-Fused
TB = Terminal Block
Ser. = Service
Ind. Sys. Brkr. & L. Ext. Handles = Individual System Breaker & Lockable External Handle

38 39 40 41 42 43 44 — EVAP. FIELD

- 38: 3
- 39: D
- 40: W : 300 PSIG DWP Waterside
- 40: V : Double Thick Insulation
- 41: S : Weld Flange Kit
- 42: M : Victaulic Flange Kit
- 42: A : Flow Switch
- 42: S : Multinat'l Vessel & Assoc.Safety Codes
- 42: F : ASME Pressure Vessel & Associated Codes (American)
- 42: T : AS 1210 Vessel & Associated Codes (Australian)
- 42: I : French Vessel & Associated Codes (DRIRE)
- 42: P : German TUV Vessel & Associated Codes (A.D. Merkblatter)
- 43: R : Italian Vessel & Associated Codes (ISPESL)
- 44: : Polish Vessel & Associated Codes
- 44: X : Remote DX Cooler
- 44: : No Option

45 46 47 — CONDENSER FIELD

- 45: X : Aluminum
- 45: C :Copper
- 45: B :BlackFin
- 45: P :Phenolic
- 47: X :TEAO Fan Motors

48 49 50 51 52 53 54 — CABINET FIELD

- 48: 1 : Wire (Full Unit) Enc. Panels (factory)
- 48: 2 : Wire (Full Unit) Enc. Panels (field)
- 48: 3 : Wire/Louvered Enc. Panels (factory)
- 48: 4 : Wire/Louvered Enc. Panels (field)
- 48: 5 : Louvered (Cond. Only) Enc. Panels (factory)
- 48: 6 : Louvered (Cond. Only) Enc. Panels (field)
- 48: 7 : Louvered (Full Unit) Enc. Panels (factory)
- 48: 8 : Louvered (Full Unit) Enc. Panels (field)
- 49: E : Compressor Sound Enclosure
- 50: X : No Option
- 51: B : Acoustic Sound Blanket
- 52: L : Low Sound Fans
- 53: H : High Static Fans
- 54: S : Final Overspray Paint
- 54: 1 : 1" Deflection
- 54: S : Seismic
- 54: N : Neoprene Pads

S:
1. Q :DENOTES SPECIAL / S.Q.
2. # :DENOTES STANDARD
3. X :w/in OPTIONS FIELD, DENOTES NO OPTION SELECTED

HANDLING AND STORAGE

DELIVERY AND STORAGE

To ensure consistent quality and maximum reliability, all units are tested and inspected before leaving the factory. Units are shipped completely assembled and containing refrigerant under pressure. Units are shipped without export crating unless this has been specified on the Sales Order.

If the unit is to be put into storage, prior to installation, the following precautions should be observed:

Ensure that all openings, such as water connections, are securely capped.

Do not store where exposed to ambient air temperatures exceeding 110°F (43°C).

The condensers should be covered to protect the fins from potential damage and corrosion, particularly where building work is in progress.

The unit should be stored in a location where there is minimal activity in order to limit the risk of accidental physical damage.

To prevent inadvertent operation of the pressure relief devices the unit must not be steam cleaned.

It is recommended that the control panel keys are removed and deposited with a responsible person on-site.

It is recommended that the unit is periodically inspected during storage.

INSPECTION

Remove any transit packing and inspect the unit to ensure that all components have been delivered and that no damage has occurred during transit. If any damage is evident, it should be noted on the carrier's freight bill and a claim entered in accordance with the instructions given on the advice note.

Major damage must be reported immediately to your local YORK representative.

MOVING THE CHILLER

Prior to moving the unit, ensure that the installation site is suitable for installing the unit and is capable of supporting the weight of the unit and all associated services.

The units are designed to be lifted using cables. A spreader bar or frame 88" (2250 mm) wide should be used in order to prevent damage to the unit from the lifting chains (See Figure 3).

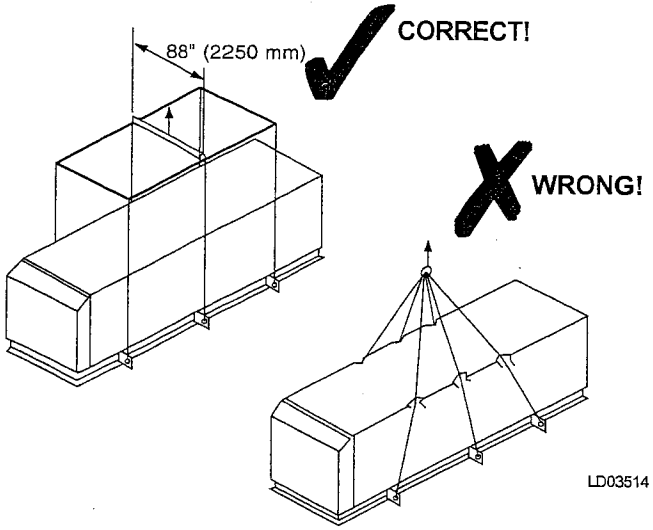

FIG. 3 – UNIT RIGGING

Units are provided with lifting eyes extending from the sides of the base frame which can be attached to directly using shackles or safety hooks (See Figure 4).

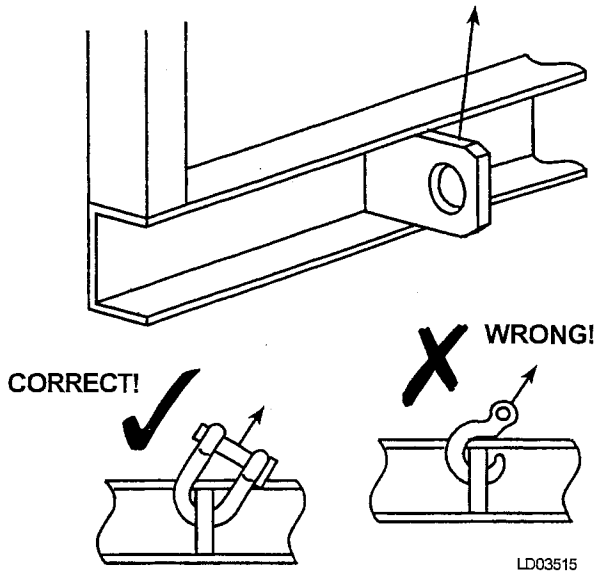

FIG. 4 – LIFTING LUGS

The unit must only be lifted by the base frame at the points provided. Never move the unit on rollers, or lift the unit using a fork-lift truck.

Care should be taken to avoid damaging the condenser cooling fins when moving the unit.

Lifting Weights

For details of weights and weight distribution refer to the Technical Data Section.

INSTALLATION

LOCATION REQUIREMENTS

To achieve optimum performance and trouble-free service, it is essential that the proposed installation site meets with the location and space requirements for the model being installed. For dimensions, weight and space requirements, including service access details, refer to the Technical Data Section.

It is important to ensure that the minimum service access space is maintained for cleaning and maintenance purposes.

OUTDOOR INSTALLATIONS

The units can be installed at ground level, or on a suitable rooftop location. In both cases an adequate supply of air is required. Avoid locations where the sound output and air discharge from the unit may be objectionable.

The location should be selected for minimum sun exposure and away from boiler flues and other sources of airborne chemicals that could attack the condenser coils and steel parts of the unit.

If located in an area which is accessible to unauthorized persons, steps must be taken to prevent access to the unit by means of a protective fence. This will help to prevent the possibility of vandalism, accidental damage, or possible harm caused by unauthorized removal of protective guards or opening panels to expose rotating or high voltage components.

For ground level locations, the unit must be installed on a suitable flat and level concrete base that extends to fully support the two side channels of the unit base frame. A one-piece concrete slab, with footings extending below the frost line is recommended. To avoid noise and vibration transmission the unit should not be secured to the building foundation.

On rooftop locations, choose a place with adequate structural strength to safely support the entire operating weight of the unit and service personnel. The unit can be mounted on a concrete slab, similar to ground floor locations, or on steel channels of suitable strength. The channels should be spaced at the same centres as the vibration mounting holes in the unit base frame and must be at least 4-3/4" (120 mm) wide at the contact points. This will allow vibration isolators to be fitted if required.

Any ductwork or attenuators fitted to the unit must not have a total static pressure resistance, at full unit airflow, exceeding the capability of the fans installed in the unit.

INDOOR INSTALLATIONS

The unit can be installed in an enclosed plant room providing the floor is level and of suitable strength to support the full operating weight of the unit. It is essential that there is adequate clearance for airflow to the unit. The discharge air from the top of the unit must be ducted away to prevent recirculation of air within the plant room. If common ducts are used for fans, non-return dampers must be fitted to the outlet from each fan.

The discharge ducting must be properly sized with a total static pressure loss, together with any intake static pressure loss, less than the available static pressure capability for the type of fan fitted.

The discharge air duct usually rejects outside the building through a louver. The outlet must be positioned to prevent the air being drawn directly back into the air intake for the condenser coils, as such recirculation will affect unit performance.

LOCATION CLEARANCES

Adequate clearances around the unit(s) are required for the unrestricted airflow for the air-cooled condenser coils and to prevent recirculation of warm discharge air back onto the coils. If clearances given are not maintained, airflow restriction or recirculation will cause a loss of unit performance, an increase in power consumption and may cause the unit to malfunction. Consideration should also be given to the possibility of down drafts, caused by adjacent buildings, which may cause recirculation or uneven unit airflow.

For locations where significant cross winds are expected, such as exposed roof tops, an enclosure of solid or louver type is recommended to prevent wind turbulence interfering with the unit airflow.

When units are installed in an enclosure, the enclosure height should not exceed the height of the unit on more than one side. If the enclosure is of louvered construction the same requirement of static pressure loss applies as for ducts and attenuators stated above.

Where accumulation of snow is likely, additional height must be provided under the unit to ensure normal airflow to the unit.

Caution: The clearance dimensions given are necessary to maintain good airflow and ensure correct unit operation. It is also necessary to consider access requirements for safe operation and maintenance of the unit and power and control panels. Local health and safety regulations, or practical considerations for service replacement of large components, may require larger clearances than those given in the Technical Data Section.

INSTALLATION OF VIBRATION ISOLATORS

Optional sets of vibration isolators can be supplied loose with each unit.

Using the Isolator tables, refer to the Technical Data Section, identify each mount and its correct location on the unit.

CP-2 Mounts - Installation

Place each mount in its correct position and lower the unit carefully onto the mounts ensuring the mount engages in the mounting holes in the unit base frame.

Transfer the unit weight evenly to the springs by turning the mount adjusting nuts (located just below the top plate of the mount) counter-clockwise to raise and clockwise to lower. This should be done two turns at a time until the top plates of all mounts are between 1/4" and 1/2" (6 and 12 mm) clear of top of their housing and the unit base is level.

SHIPPING BRACES

The chiller's modular design does not require shipping braces.

PIPEWORK CONNECTION

General Requirements

The following piping recommendations are intended to ensure satisfactory operation of the unit(s). Failure to follow these recommendations could cause damage to the unit, or loss of performance, and may invalidate the warranty.

Caution: The maximum flow rate and pressure drop for the cooler must not be exceeded at any time. Refer to the Technical Data Section for details.

The liquid must enter the cooler by the inlet connection. The inlet connection for the cooler is at the far end of the unit when viewed from the power and control panels.

A flow switch must be installed in the customer pipework at the outlet of the cooler and wired back to the control panel using shielded cable. For details refer to "Electrical Connection". This is to prevent damage to the cooler caused by the unit operating without adequate liquid flow.

The flow switch used must have gold plated contacts for low voltage/current operation. Paddle type flow switches suitable for 150 PSIG (10 bar) working pressure and having a 1" (25 mm) N.P.T. connection can be obtained from YORK as an accessory for the unit. Alternatively a differential pressure switch sited across an orifice plate may be used, preferably of the high/low limit type.

The chilled liquid pump(s) installed in the pipework system(s) should discharge directly into the unit cooler section of the system. The pump(s) may be controlled external to the unit - but an override must be wired to the control panel so that the unit can start the pump in the event that the liquid temperature falls below the minimum setting. For details refer to "Electrical Connection".

Pipework and fittings must be separately supported to prevent any loading on the cooler. Flexible connections are recommended which will also minimize transmission of vibrations to the building. Flexible connections must be used if the unit is mounted on anti-vibration mounts as some movement of the unit can be expected in normal operation.

Pipework and fittings immediately next to the cooler should be readily de-mountable to enable cleaning before operation, and to facilitate visual inspection of the exchanger nozzles.

The cooler must be protected by a strainer, preferably of 30 mesh, fitted as close as possible to the liquid inlet connection, and provided with a means of local isolation.

The cooler must not be exposed to flushing velocities or debris released during flushing. It is recommended that a suitably sized by-pass and valve arrangement is installed to allow flushing of the pipework system. The by-pass can be used during maintenance to isolate the heat exchanger without disrupting flow to other units.

Thermometer and pressure gauge connections should be provided on the inlet and outlet connections of each cooler.

Drain and air vent connections should be provided at all low and high points in the pipework to permit drainage of the system and to vent any air in the pipes.

Liquid systems at risk of freezing, due to low ambient temperatures, should be protected using insulation and heater tape and/or a suitable glycol solution. The liquid pump(s) must also be used to ensure liquid is circulated when the ambient temperature approaches freezing point. Insulation should also be installed around the cooler nozzles. Heater tape of 21 watts per meter under the insulation is recommended, supplied independently and controlled by an ambient temperature thermostat set to switch on at 37°F (21°C) above the freezing temperature of the liquid.

The liquid circulation pump must be controlled by the unit. This will ensure that when the liquid temperature falls within 3° or 5°F (2° or 3°C) of freezing the pump will start.

The cooler is protected by heater mats under the insulation which are supplied from the unit control system power supply. During risk of freezing the control system should be left switched on to provide the freeze protection function unless the liquid systems have been drained.

Caution: Any debris left in the water pipework between the strainer and cooler could cause serious damage to the tubes in the cooler and must be avoided. The installer/user must also ensure that the quality of the water in circulation is adequate, without any dissolved gases which can cause oxidation of steel parts within the cooler.

WATER TREATMENT

The unit performance given in the Design Guide is based on a fouling factor of 0.00025 $ft^2hr°F/Btu$ (0.044m2/hr °C/kW). Dirt, scale, grease and certain types of water treatment will adversely affect the heat exchanger surfaces and therefore unit performance. Foreign matter in the water system(s) can increase the heat exchanger pressure drop, reducing the flow rate and causing potential damage to the heat exchanger tubes.

Aerated, brackish or salt water is not recommended for use in the water system(s). YORK recommends that a water treatment specialist is consulted to determine that the proposed water composition will not affect the evaporator materials of carbon steel and copper. The pH value of the water flowing through the cooler must be kept between 7 and 8.5.

PIPEWORK ARRANGEMENT

The following is a suggested pipework arrangement for single unit installations. For multiple unit installations, each unit should be piped as shown.

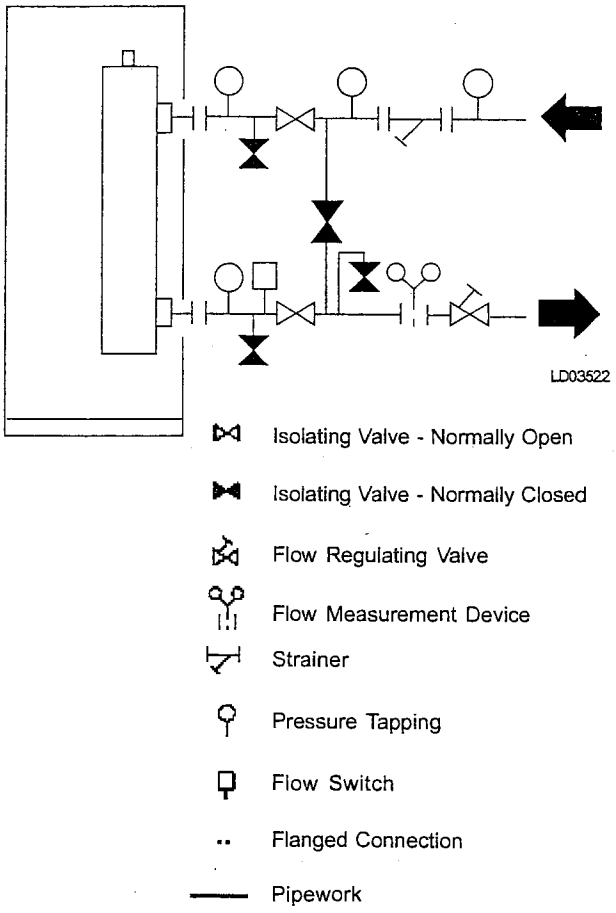

FIG. 5 – PIPEWORK ARRANGEMENT

CONNECTION TYPES & SIZES

For connection sizes relevant to individual models refer to the Technical Data Section.

COOLER CONNECTIONS

Standard chilled liquid connections on all coolers are of the Victaulic Groove type.

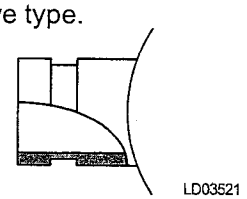

FIG. 6 – VICTAULIC GROOVE

Option Flanges

One of two types of flanges may be fitted depending on the customer or local Pressure Vessel Code requirements. These are Victaulic-Adapter flanges, normally supplied loose, or weld flanges which may be supplied loose or ready fitted. Victaulic-Adapter and weld flange dimensions are to ISO 7005 - NP10.

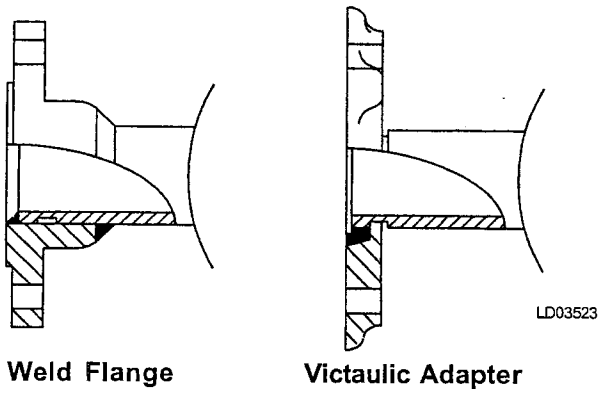

FIG. 7 – FLANGE ATTACHMENTS

REFRIGERANT RELIEF VALVE PIPING

Coolers and oil separators are each protected against internal refrigerant overpressure by refrigerant relief valves. For coolers, a pressure relief valve is mounted on each of the main refrigerant lines connecting the cooler to the compressors. On oil separators the pressure relief valve is mounted on the side near top of the vessel body.

It is recommended that a piece of pipe is fitted to each valve and directed so that when the valve is activated the release of high pressure gas and liquid cannot be a dan-

ger or cause injury. For indoor installations pressure relief valves should be piped to the exterior of the building.

The size of any pipework attached to a relief valve must be of sufficient diameter so as not to cause resistance to the operation of the valve. Unless otherwise specified by local regulations, table internal diameter depends on the length of pipe required and is given by the following formula:

$$D^5 = 1.447 \times L$$

Where:
D = minimum pipe internal diameter
L = length of pipe in meters

If relief pipework is common to more than one valve its cross sectional area must be at least the total required by each valve. Valve types should not be mixed on a common pipe. Precautions should be taken to ensure that the outlet of relief valves/vent pipe remain clear of obstructions at all times.

DUCTWORK CONNECTION

General Requirements

The following ductwork recommendations are intended to ensure satisfactory operation of the unit. Failure to follow these recommendations could cause damage to the unit, or loss of performance, and may invalidate the warranty.

When ducting is to be fitted to the fan discharge it is recommended that the duct should be the same cross sectional area as the fan outlet and straight for at least three feet (1 meter) to obtain static regain from the fan.

Ductwork should be suspended with flexible hangers to prevent noise and vibration being transmitted to the structure. A flexible joint is also recommended between the duct attached to the fan and the next section for the same reason. Flexible connectors should not be allowed to concertina.

The unit is not designed to take structural loading. No significant amount of weight should be allowed to rest on the fan outlet flange, deck assemblies or condenser coil module. No more than 3 feet (1 meter) of light construction ductwork should be supported by the unit. Where cross winds may occur, any ductwork must be supported to prevent side loading on the unit.

If the ducts from two or more fans are to be combined into a common duct, back-flow dampers should be fitted in the individual fan ducts. This will prevent recirculation of air when only one of the fans is running.

Units are supplied with outlet guards for safety and to prevent damage to the fan blades. If these guards are removed to fit ductwork, adequate alternative precautions must be taken to ensure persons cannot be harmed or put at risk from rotating fan blades.

ELECTRICAL CONNECTION

The following connection recommendations are intended to ensure safe and satisfactory operation of the unit. Failure to follow these recommendations could cause harm to persons, or damage to the unit, and may invalidate the warranty.

Warning: No additional controls (relays, etc.) should be mounted in the control panel. Power and control wiring not connected to the control panel should not be run through the control panel. If these precautions are not followed it could lead to a risk of electrocution. In addition, electrical noise could cause malfunctions or damage the unit and its controls.

Warning: After connection do not switch on mains power to the unit. Some internal components are live when mains is switched on and this must only be done by Authorized persons.

POWER WIRING

All electrical wiring should be carried out in accordance with local regulations. Route properly sized cables to cable entries on both sides of the unit.

In accordance with U.L. Standard it is the responsibility of the user to install overcurrent protection devices between the supply conductors and the power supply terminals on the unit.

To ensure that no eddy currents are set up in the power panel, the cables forming each 3 phase power supply must enter via the same cable entry.

Warning: All sources of supply to the unit must be taken via a common point of isolation (not supplied by YORK).

STANDARD UNITS WITH MULTI POINT POWER SUPPLY WIRING

Standard units require two 3 phase separately fused 3 wire supplies plus a ground per refrigerant system. One supply to be connected to each of the power panels.

Connect each of the main 3 phase supplies to the circuit breakers, non-fused disconnect switches or terminal boards located in the power panels using lug sizes detailed in the Technical Data Section.

Connect the ground wires to the main protective ground terminals in each power panel.

Units with Single Point Power Supply Wiring

Units require only one 3 phase plus ground.

Connect the 3 phase supplies to the terminal block or non-fused disconnect switch located in the options panel using lug sizes detailed in the Technical Data Section.

Connect a ground wire to the main protective ground terminal.

ontrol Transformer Primary Voltage Tappings

The 3-wire control transformer is mounted in the options panel. It is important to check that the correct primary tapping has been used.

With the supply to the unit isolated, check that the tapping used conforms to the site supply voltage.

Remote Emergency Stop Device

If required, a remote emergency stop device can be wired into the unit. The device should be wired into terminals 31 and 32 in the control panel.

CONTROL PANEL WIRING

All wiring to the control panel terminal block is nominal 30 Vdc and must be run in shielded cable, with the shield grounded at the panel end only. Run shielded cable separately from mains cable to avoid electrical noise pick-up. Use the control panel cable entry to avoid the power cables.

The voltage free contacts must be suitable for 30 Vdc (gold contacts recommended). If the voltage free contacts form part of a relay or contactor, the coil of the device must be suppressed using a standard R/C suppressor. The above precautions must be taken to avoid electrical noise which could cause a malfunction or damage to the unit and its controls.

The length of cable to these terminals must not exceed 25 ft. (7.5 m) unless an optional input isolator kit is fitted. The optional input isolator kit uses 15 Vdc (not 30 Vdc).

VOLTS FREE CONTACTS

Chilled Liquid Pump Starter

Terminals 25 and 26 close to start the chilled liquid pump. This contact can be used as a master start/stop for the pump in conjunction with the daily start/stop schedule. If no schedule is set, and the customer has master control of the pump, the contact must be used to override the customer master start/stop so that the YORK contact can start the pump in the event of a low temperature liquid condition.

Run Contact

Terminals 29 and 30 close to indicate that a system is running.

Alarm Contacts

Each system has a voltage-free change over contact which will operate to signal an alarm condition whenever a system locks out, or there is a power failure. To obtain system alarm signal, connect the alarm circuit to volt free terminals 23 and 24 for No. 1 System and to terminals 27 and 28 for No.2 System.

SYSTEM INPUTS

Flow Switch

A chilled liquid flow switch of suitable type must be connected to terminals 13 and 14 to provide adequate protection against loss of liquid flow.

Remote Run/Stop

Connect remote switch(es) in series with the flow switch to provide remote run/stop control if required.

Remote Print

Closure of suitable contacts connected to terminals 13 and 18 will cause a hard copy printout of Operating Data/ Fault History to be made if an optional printer is connected to the RS 232 port.

Remote Set Point Offset - Temperature

Timed closure of suitable contacts connected to terminals 13 and 17 (PWM contacts) will give remote offset function of the chilled liquid set point if required.

Remote Set Point Offset - Current

Timed contact closure of a suitable contact connected to terminals 13 and 16 (PWM contacts) will give remote offset of EMS% CURRENT LOAD LIMIT.

POWER AND CONTROL PANEL LAYOUTS

POWER PANELS

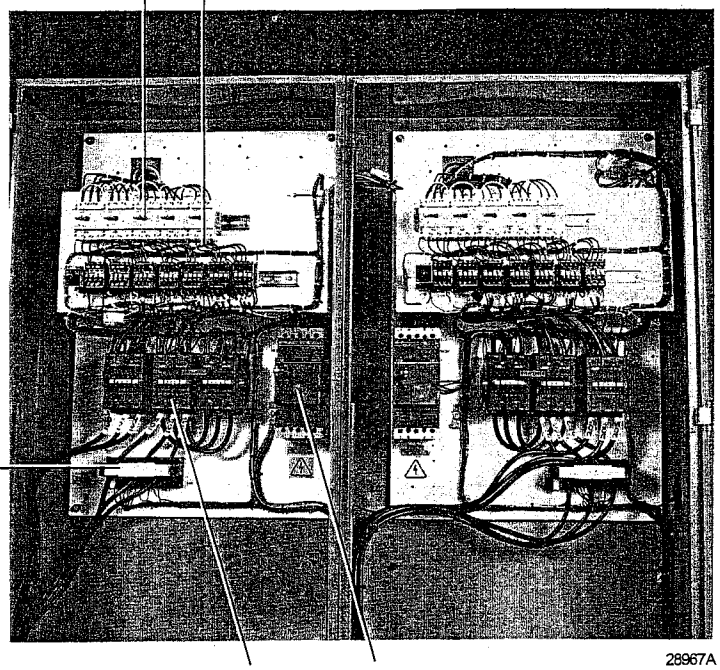

CONTROL PANEL

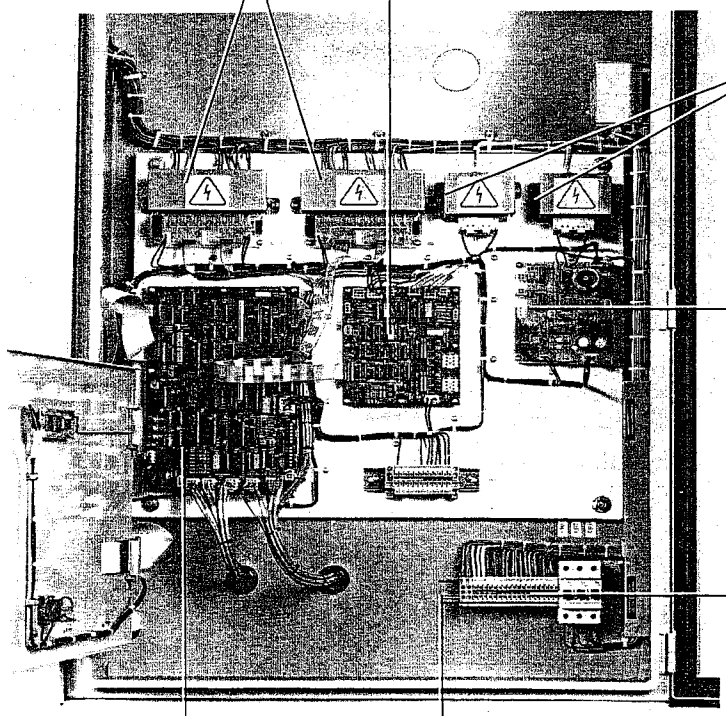

FIG. 8 – PANEL LAYOUTS

CONNECTION DIAGRAMS

MULTIPLE POINT POWER SUPPLY CONNECTION

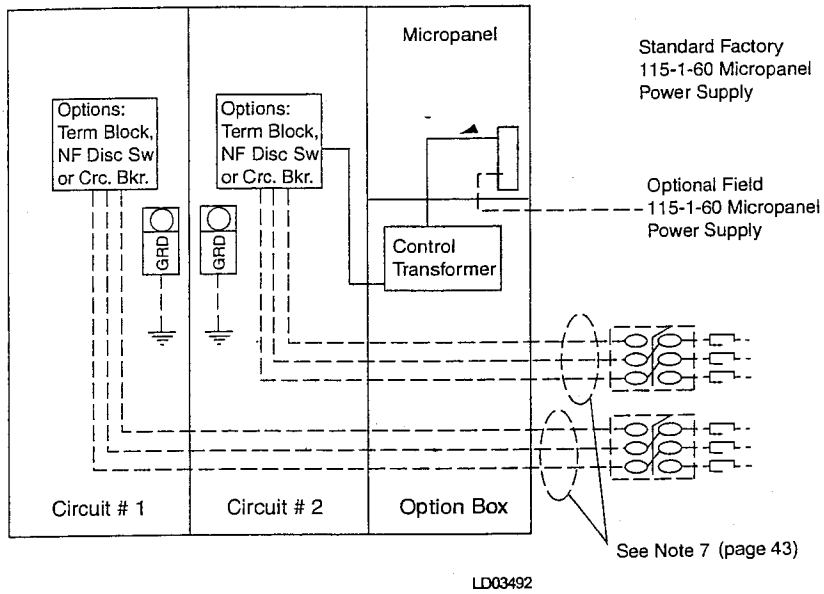

Each of the two field provided power supply circuits to the unit with individual branch circuit protection. Field connections to factory provided Circuit Breakers (Opt), Non-Fused Disconnect Switches (Opt), or Terminal Blocks (Opt) in each of the two Power Panels.

OPTIONAL SINGLE POINT POWER CONNECTION WITH INDIVIDUAL CIRCUIT PROTECTION

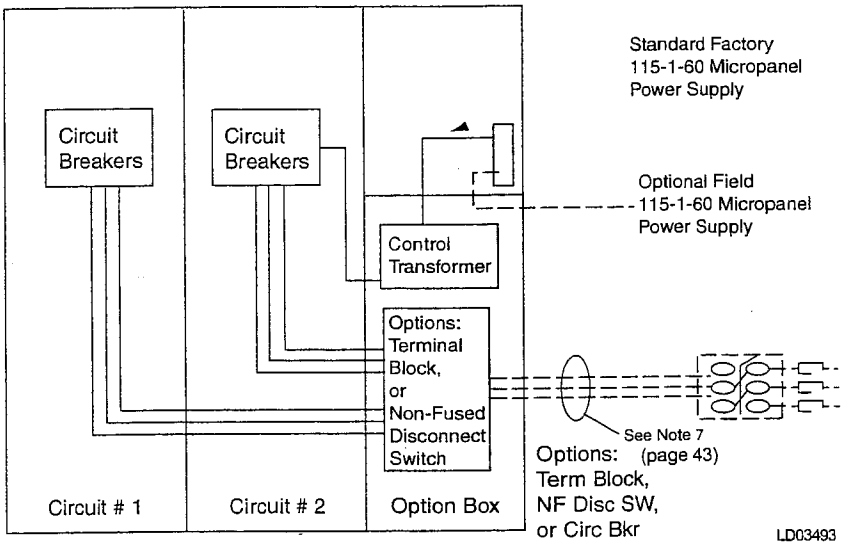

One field provided power supply circuit to the unit with circuit protection. Field connections to factory provided Non-Fused Disconnect Switch (Opt), or Terminal Block (Opt) in the Options Panel. Factory connections to Circuit Breakers in each of the two Power Panels.

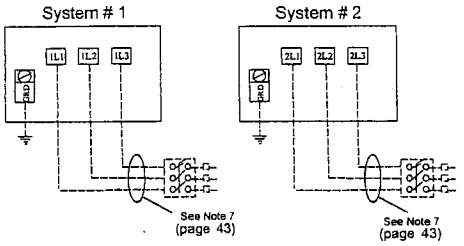

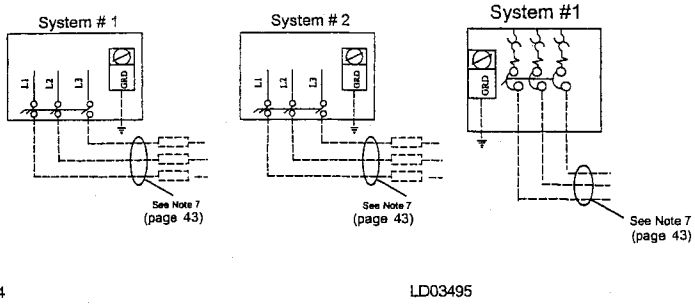

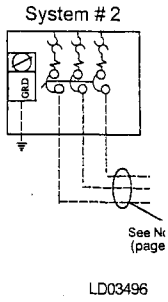

SINGLE POINT POWER CONNECTION WITH COMBINED CIRCUIT PROTECTION

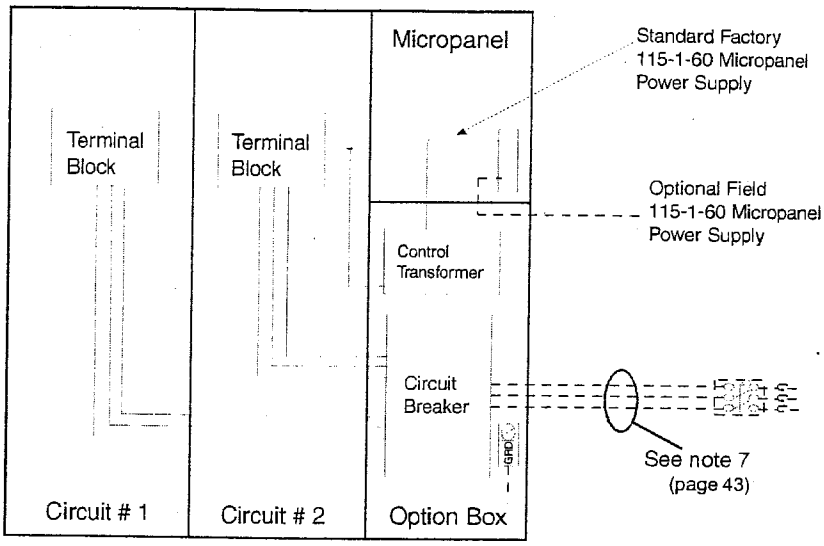

LD03497

One field provided power supply circ
the unit with circuit protection. Field
nections to the Circuit Breaker in the
tion Panel. Factory connections to the
minal Blocks in each of the two P
Panels.

SINGLE POINT POWER CONNECTION WITHOUT CIRCUIT PROTECTION

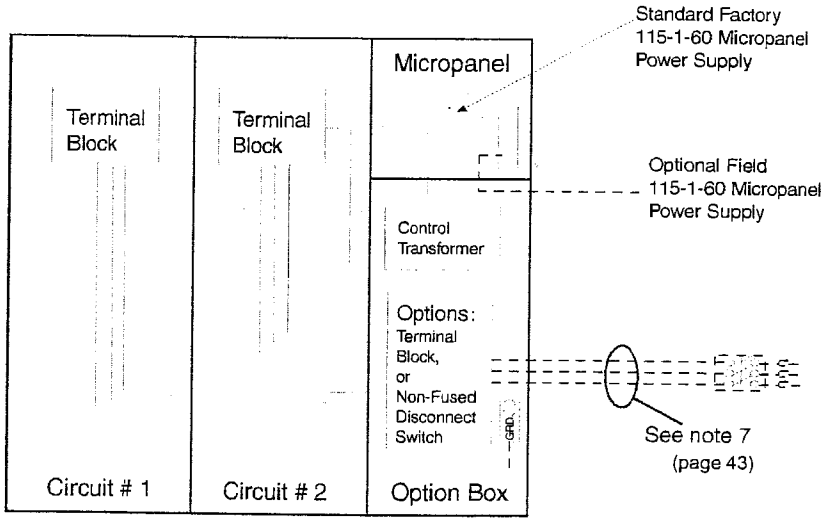

LD03498

One field provided power supply circ
the unit with circuit protection. Field
nections to Terminal Block or Non-F
Disconnect Switch in the Option P
Factory connections to Terminal Bloc
each of the two Power Panels.

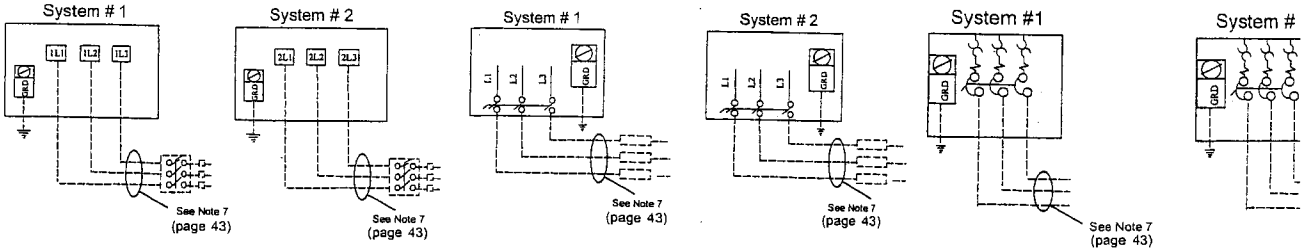

LD03499

LD03500

CUSTOMER CONNECTIONS

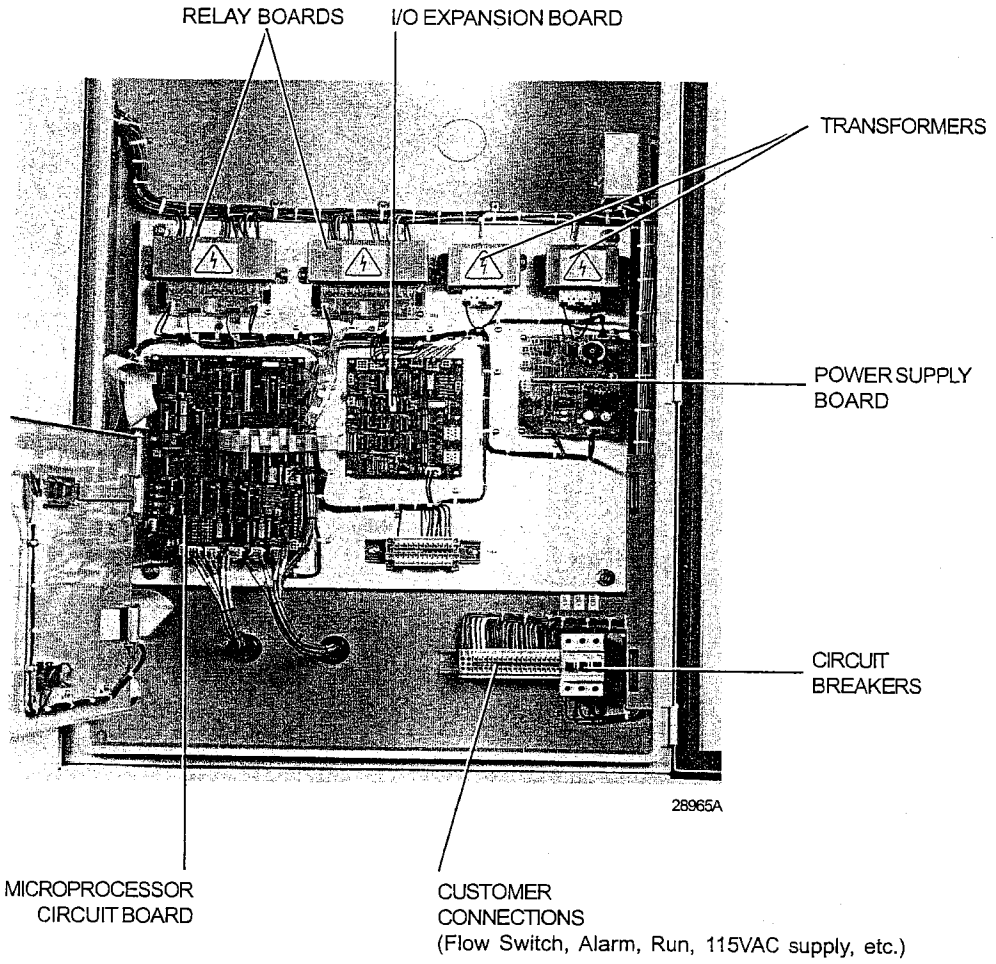

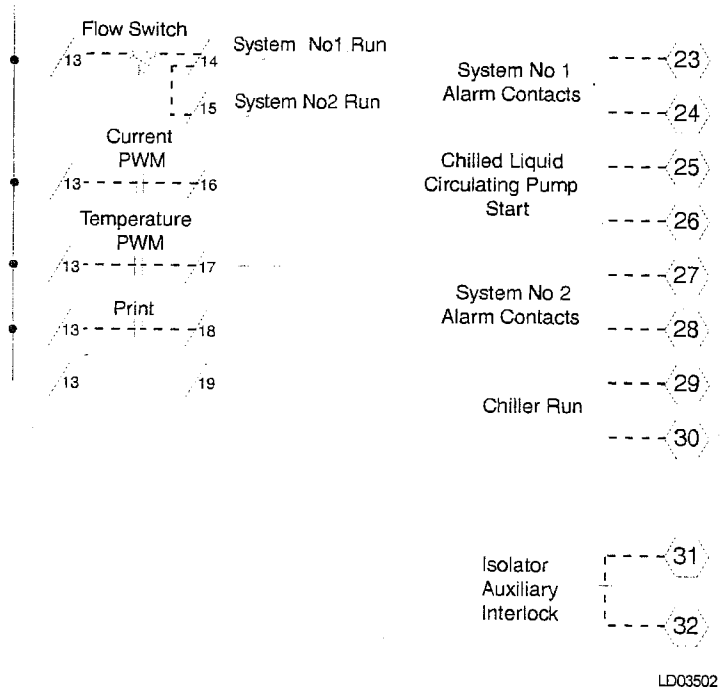

FIG. 9 – CUSTOMER CONNECTIONS

COMMISSIONING

PREPARATION

Caution: Commissioning of this unit should only be carried out by YORK Authorized personnel.

The Millennium Microcomputer Control System Operating Instructions must be read in conjunction with this section.

PREPARATION - POWER OFF

The following checks should be made with the customer supply/supplies to the unit switched OFF.

Inspection

Inspect unit for installation damage. If found take action and/or repair as appropriate.

Refrigerant charge

Units are normally shipped as standard with a full refrigerant operating charge. Check that refrigerant pressure is present in both systems and that no leaks are apparent. If no pressure is present a leak test must be undertaken, the leak(s) located and repaired. Repaired systems and units supplied with a nitrogen holding charge must be evacuated with a suitable vacuum pump/recovery unit as appropriate to below 100 microns.

Do not liquid charge with static water in the cooler. Care must also be taken to liquid charge slowly to avoid excessive thermal stress at the charging point. Once the vacuum is broken, charge into the condenser coils with the full operating charge as given in the Technical Data Section.

Valves

Open each compressor suction, economizer, and discharge valves fully (counter-clockwise) then close one turn of the stem to ensure operating pressure is fed to the pressure transducers. Open the liquid line service valve fully and ensure the oil return line ball valve is open in each system.

Compressor oil

Compressor lubrication systems must be primed before first time start-up. Only the correct type of oil must be used as given in the Spare Parts Section.

To add oil to a circuit - connect a YORK hand oil pump (Part No. 470-10654-000) to the 1/4" oil priming valve on the oil separator piping with a length of clean hose or copper line, but do not tighten the flare nut. Using clean oil of the correct type ("L" oil), pump oil until all air has been purged from the hose then tighten the nut. Stroke the oil pump 10 times (delivering approximately 0.4 gal) to prime the oil system. The oil level should be between the middle of the lower and middle of the upper sight glasses of the oil separator. Approximately 5 gallons is present in the entire chiller system, with 1-2 gallons in the oil separator. If it is necessary to add oil, continue to stroke the pump until the correct level is achieved.

Fans

Check that all fans are free to rotate and are not damaged. Ensure blades are at the same height when rotated. Ensure fan guard is securely fixed.

Isolation/protection

Verify that all sources of electrical supply to the unit are taken from a single point of isolation. Check that the maximum recommended fuse sizes given in the Technical Data Section have not been exceeded.

Control panel

Check the panel to see that it is free of foreign materials (wire, metal chips, etc.) and clean out if required.

Power connections

Check the customer power cables are connected correctly. Ensure that connections of power cables within the panels to the circuit breakers, terminal blocks or switch disconnectors are tight.

Grounding

Verify that the unit's protective terminal(s) are properly connected to a suitable grounding point. Ensure that all unit internal ground connections are tight.

Overloads

Ensure that the fan overloads settings are correct for the type of fan fitted.

Supply voltage

Verify that the site voltage supply corresponds to the unit requirement and is within the limits given in the Technical Data Section.

Control Transformer

The 3-wire control transformer is mounted in the options panel. It is important to check that the correct primary tapping has been used:

With the supply to the unit isolated remove the lid to the transformer box.

Check that the tapping used conforms to the site supply voltage.

Switch Settings

Ensure that the unit Auto/OFF switch on the display door and the micro board system switches S2 and S5 are set to "0" (OFF). Set the red handled emergency stop device on the options panel to "1" (ON). For units fitted with door interlocked circuit breakers the power panel doors must be closed and the devices set to "1" (ON). The customer's disconnection devices can now be set to ON.

Warning: The machine is now live!

The unit is fitted with an under voltage relay in each panel and it may take between 5 to 10 seconds for its contacts to close and energize the unit's electronics, including the display on the main panel.

Crankcase heaters

Verify the compressor crankcase heaters are energized. If the ambient temperature is above 96°F (36°C) the compressor crankcase heaters must be on for at least 24 hours before start-up to ensure all refrigerant liquid is driven out of the oil. If the ambient temperature is below 86°F (30°C) then allow 8 hours.

Water System

Verify that the chilled liquid system has been installed correctly, and has been commissioned with the correct direction of water flow through the cooler. The inlet should be at the refrigerant pipework connection end of the cooler. Purge air from the top of the cooler using the plugged air vent mounted on the top of the cooler body. Flow rates and pressure drops must be within the limits given in the Technical Data Section. Operation outside of these limits is undesirable and could cause damage.

Flow switch

Verify a chilled water flow switch is correctly fitted in the customer's pipework on the cooler outlet, and wired into the control panel correctly using shielded cable. There should be a straight run of at least 5 pipe diameters on either side of the flow switch.

Temperature sensor(s)

Ensure the leaving liquid temperature sensor is coated with heat conductive compound (part no. 013-00890-000) and is inserted in the water outlet sensor pocket of the cooler. This sensor also acts as the freeze protection thermostat sensor and must always be in the water OUTLET sensor pocket.

Control supply

Verify the control panel display is illuminated.

Programmed options

Verify that the options factory programmed into the Microcomputer Control Center are in accordance with the customer's order requirements by pressing the 'Options' key on the keypad and reading the settings from the display.

Programmed settings

Ensure the system cut-out and operational settings are in accordance with the instructions provided in Section 8 (page 129) and with the general chiller operational requirements by pressing the 'Program' key. The chilled liquid temperature control settings need to be set according to the unit model and required operating conditions.

Date & time

Program the date and time by first ensuring that the CLK jumper J18 on the microprocessor board is in the ON position (top two pins). Then press the 'Clock Set Time' key and set the date and time. (See Section 7.)

Start/Stop schedule

Program the daily and holiday start/stop by pressing the 'Set Schedule/Holiday' key. (See Section 7.)

Set-point and Remote offset

Set the required leaving chilled liquid temperature set-point and control range. If remote temperature reset (offset) is to be used, the maximum reset must be programmed by pressing the 'Remote Reset Temp' key. (See Section 6.)

FIRST TIME START-UP

Caution: During the commissioning period there should be sufficient heat load to run the unit under stable full load operation to enable the unit controls, and system operation to be set up correctly and a commissioning log taken. Be sure that the Micropanel is properly programmed (page 129) and the the System Startup Checklist (page 89) is completed.

Interlocks

Verify that liquid is flowing through the cooler and that heat load is present. Ensure that any remote run interlocks are in the run position and that the run schedule requires the unit to run or is overridden.

System switches

Place the 'Sys 1' switch on the microprocessor board to the 'ON' position - see loading/unloading sequence on page 124.

Start-up

Remove the locking device from the unit Auto/OFF switch which prevents unauthorized starting of the unit before commissioning. Press the 'Status' key, then turn the unit switch to the "1" position to start the unit (there may be a few seconds delay before the first compressor starts because of the anti-recycle timer). Be ready when each compressor starts, to switch the unit OFF immediately if any unusual noises or other adverse conditions develop. Use the appropriate emergency stop device if necessary.

Oil pressure

When a compressor starts, press the relevant 'System Pressures' key and verify that oil differential pressure develops immediately. If oil pressure does not develop, the automatic controls will shut down the compressor. Under no circumstances should a restart attempt be made on a compressor which does not develop oil pressure immediately. Switch the unit switch to the '0' position (OFF).

Refrigerant flow

When a compressor starts a flow of liquid refrigerant will be seen in the liquid line sight glass. After several minutes operation and providing a full charge of refrigerant is in the system, the bubbles will disappear and be replaced by a solid column of liquid.

Fan rotation

As discharge pressure rises, the condenser fans operate in stages to control the pressure. Verify that the fan operation is correct for the type of unit.

Suction Superheat

Check suction superheat at steady full compressor load only. Measure suction temperature on the copper line about 6" (150 mm) before the compressor suction service valve. Measure suction pressure at the compressor service valve. Superheat should be 10°F to 12°F (-7°C to -6°C).

Economizer Superheat

Check economizer superheat at steady full compressor load only. Measure gas temperature on the economizer outlet pipe next to the expansion valve bulb. Measure gas pressure at the back seat port of the motor cooling service valve. Superheat as measured should be 10°F to 12°F (-7°C to -6°C).

Expansion Valve Adjustment

The expansion valves are factory set and should not need adjustment. If any superheat values are out of range, however, the expansion valve adjusting screw should be adjusted no more than 1 turn at a time ('in' to increase superheat, 'out' to decrease superheat), allowing at least 10 minutes for the valve to stabilize before rechecking the value of superheat.

Subcooling

Check liquid subcooling at steady full compressor load only. It is important that all fans are running for the system. Measure liquid line temperature on the copper line beside the main liquid line service valve. Measure liquid pressure at the liquid line service valve. Subcooling should be 12°F to 15°F (-8°C to -7°C). No bubbles should show in the sight glass. If subcooling is out of range add or remove refrigerant as required. Do not overcharge the unit. The liquid flow to the main cooler TXV is subcooled further by the economizer, increasing subcooling to between 22°F and 28°F (-15°C and -12°C).

General Operation

After completion of the above checks for System 1, stop the unit, switch OFF the 'SYS 1' switch on the main panel microprocessor board and repeat the process for each subsequent system. When all run correctly, stop the unit, switch all applicable switches to the 'ON' position and restart the unit.

OPERATION

GENERAL DESCRIPTION

The units are designed to work independently, or in conjunction with other equipment via a YORK ISN building management system or other automated control system. When operating, the unit controls monitor the chilled liquid system temperature at the unit and take the appropriate action to maintain this temperature within desired limits. This action will involve running one or more compressors at a suitable load step to match the cooling effect of the refrigerating systems to the heat load on the liquid system. The heat removed from the chilled liquid is then rejected from the air cooled condenser coils.

The following sections give an overview of the operation of the unit. For detailed information, reference should be made to the Chiller Control Panel Programming and Data Access Operating Instructions for the unit (page 93).

START-UP

Check the main power supplies to the unit are 'ON', all refrigerant service valves are open (counter-clockwise one turn short of fully open) and chilled liquid flow has been established (unless the unit chilled liquid pump start con-'rol is being used, in which case just ensure the pump ,upply is on). Ensure only the correct system switches (SYS 1-2) on the microprocessor circuit board are in the 'ON' position.

Press the 'STATUS' key on the keypad and then switch the unit ON/OFF switch below the keypad to the ON position.

The controller will perform a pre-check to ensure that the daily/holiday schedule and any remote interlocks will allow the unit to run, all safety cut-outs are satisfied and that cooling load is required (i.e. that the chilled liquid temperature is outside the set limits). Any problems found by the pre-check will be displayed if present. If no problems are present and cooling duty is required the lead compressor will start.

The display will show the anti-coincidence timer status for the lag compressor, followed by 'NO COOL LOAD' until it is called to operate by the control system.

NORMAL RUNNING AND CYCLING

Once the unit has been started, all operations are fully automatic. After an initial period at minimum capacity on the lead compressor, the control system will adjust the unit load depending on the chilled liquid temperature and rate of temperature change. If high heat load is present, the controller will increase the capacity of the lead compressor and/or start-up the other compressor.

If very little heat load is present, the lead compressor will continue at minimum capacity or may simply stop again to avoid overcooling the liquid. If the latter is the case, one compressor will restart automatically should the liquid temperature rise again.

Once a compressor is running, discharge pressure rises as refrigerant is pumped into the air cooled condenser coils. This pressure is controlled by stages of fans to ensure maximum unit efficiency while maintaining sufficient pressure for correct operation of the condensers and expansion valves.

When a compressor is running the controller monitors oil pressure, motor current, and various other system parameters such as discharge pressure, chilled liquid temperature, etc. Should any problems occur, the control system will immediately take appropriate action and display the nature of the fault (Section 2 Page 104).

SHUTDOWN

The unit can be stopped at any time by switching the unit ON/OFF switch just below the keypad to the OFF position. The compressor and oil separator heaters will energize to prevent refrigerant condensing in the compressor rotors and to prevent the compressor oil becoming saturated with refrigerant. If ambient temperatures are low, the cooler heater mats will also energize to prevent the possibility of liquid freezing in the vessels. The mains power to the unit should not normally be switched OFF, even when the unit is not required to run.

If mains power must be switched OFF, (for extended maintenance or a shutdown period), the compressor suction, discharge and motor cooling service stop valves should be closed (clockwise) and if there is a possibility of liquid freezing due to low ambient temperatures, the coolers should be drained. Valves should be opened and power must be switched on for at least 8 Hours (36 Hours if ambient temperature is over 86°F [30°C]) before the unit is restarted.

TECHNICAL DATA

FLOW RATE AND PRESSURE DROP CHARTS

COOLER WATER PRESSURE DROP (ENGLISH UNITS)

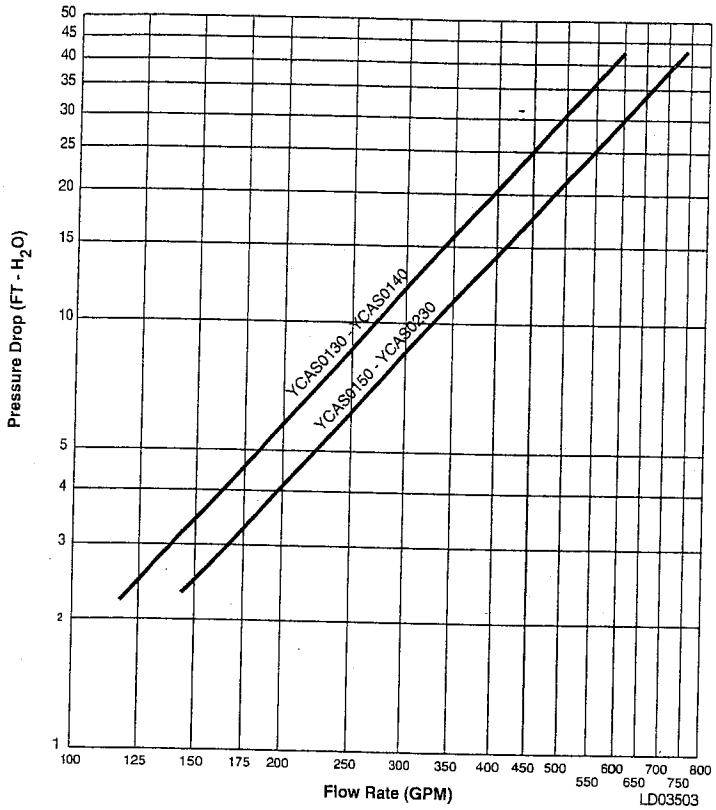

COOLER WATER PRESSURE DROP (SI UNITS)

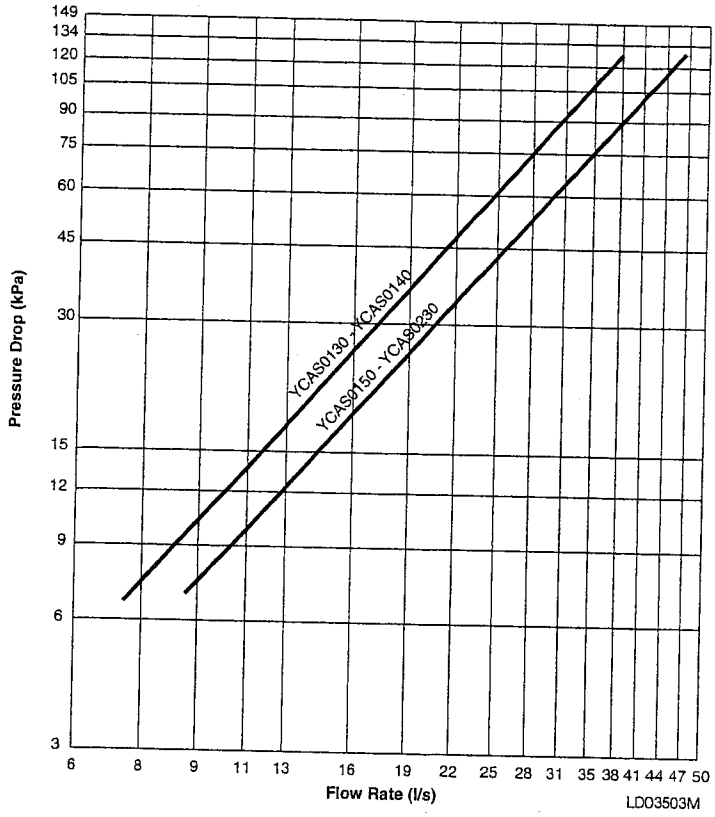

FIG. 10 – FLOW RATE AND PRESSURE DROP CHARTS

The cooler is designed in accordance with ARI-590-92 which allows for an increase in pressure drop of up to 15% above the design value given above. Debris in the water may also cause additional pressure drop.

When using glycol solutions, pressure drops are higher than with water (see correction factors to be applied when using glycol solutions). Special care must be taken not to exceed the maximum allowed.

A = Correction Factor
B = Mean Temperature through Cooler
C = Concentration W/W

GLYCOL CORRECTION FACTORS

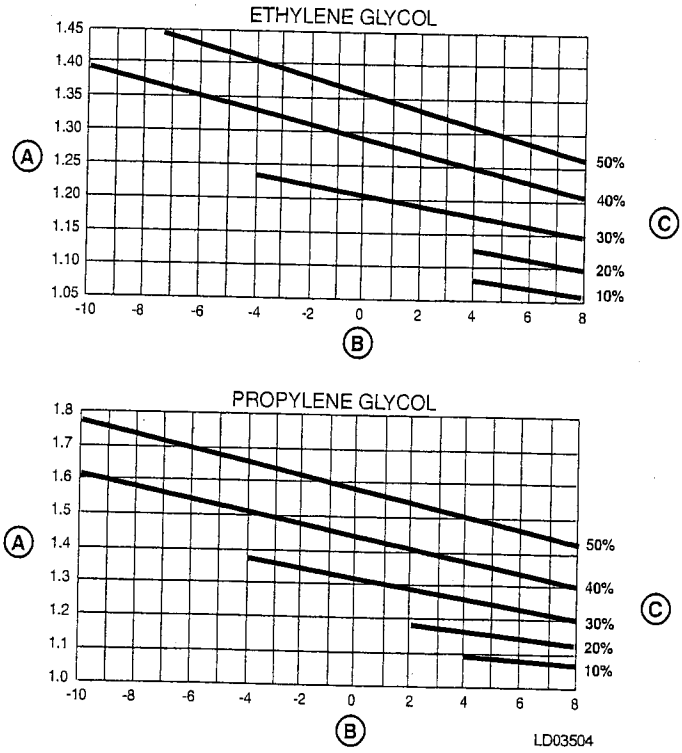

FIG. 11 – GLYCOL CORRECTION FACTORS

PHYSICAL DATA

ENGLISH UNITS

	MODEL NUMBER YCAS								
	0130EC	0140EC	0150EC	0160EC	0170EC	0180EC	0200EC	0210EC	0230EC
General Unit Data									
Unit Capacity at ARI Conditions, Tons	123.7	134.6	148.0	156.7	163.8	170.8	189.2	197.6	212.1
Number of Independent Refrigerant Circuits	2	2	2	2	2	2	2	2	2
Refrigerant Charge, R-22, Ckt.-1 / Ckt.-2, lbs.	180 / 180	180 / 180	180 / 190	190 / 190	190 / 190	190 / 190	220 / 220	220 / 220	220 / 220
Oil Charge, Ckt.-1 / Ckt.-2, gallons[2]	5 / 5	5 / 5	5 / 5	5 / 5	5 / 5	5 / 5	5 / 5	5 / 5	5 / 5
Shipping Weight:									
Aluminum Fin Coils, lbs.	9,888	10,110	10,599	10,583	10,694	10,805	11,849	11,970	12,081
Copper Fin Coils, lbs.	11,154	11,376	11,865	11,849	11,960	12,071	13,441	13,552	13,663
Operating Weight:									
Aluminum Fin Coils, lbs.	10,315	10,537	11,263	11,247	11,358	11,469	12,513	12,634	12,745
Copper Fin Coils, lbs.	11,581	11,803	12,529	12,513	12,624	12,735	14,105	14,216	14,327
Compressors, DXS Semihermetic Twin Screw									
Quantity per Chiller	2	2	2	2	2	2	2	2	2
Nominal Ton Size, Ckt.-1 / Ckt.-2	62 / 62	68 / 68	78 / 68	78 / 78	78 / 85	85 / 85	95 / 95	95 / 105	105 / 105
Refrigerant Economizer, Ckt.-1 / Ckt.-2	No / No	Yes / Yes	No / Yes	No / No	No / Yes	Yes / Yes	No / No	No / Yes	Yes / Yes
Condensers, High Efficiency Fin / Tube with Integral Subcooler									
Total Chiller Coil Face Area, ft²	256	256	256	256	256	256	320	320	320
Number of Rows	3	3	3	3	3	3	3	3	3
Fins per Inch	13	13	13	13	13	13	13	13	13
Condenser Fans									
Number, Ckt.-1 / Ckt.-2	4 / 4	4 / 4	4 / 4	4 / 4	4 / 4	4 / 4	5 / 5	5 / 5	5 / 5
Fan Motor, HP / kW	2 / 1.8	2 / 1.8	2 / 1.8	2 / 1.8	2 / 1.8	2 / 1.8	2 / 1.8	2 / 1.8	2 / 1.8
Fan & Motor RPM	1140	1140	1140	1140	1140	1140	1140	1140	1140
Fan Diameter, inches	35.4	35.4	35.4	35.4	35.4	35.4	35.4	35.4	35.4
Fan Tip Speed, feet/min.	10,575	10,575	10,575	10,575	10,575	10,575	10,575	10,575	10,575
Total Chiller Airflow, CFM	114,400	114,400	114,400	114,400	114,400	114,400	143,000	143,000	143,000
Evaporator, Direct Expansion									
Water Volume, gallons	51	51	79	79	79	79	79	79	79
Maximum[1] Water Side Pressure, psig	150	150	150	150	150	150	150	150	150
Maximum Refrigerant Side Pressure, psig	350	350	350	350	350	350	350	350	350
Minimum Chilled Water Flow Rate, gpm	147	170	182	188	203	218	228	246	272
Maximum Chilled Water Flow Rate, gpm	600	600	747	747	747	747	747	747	747
Water Connections, inches	8	8	8	8	8	8	8	8	8

1 Optional 300psig Waterside available
2 See page 35.

SI UNITS

	MODEL NUMBER YCAS								
	0130EC	0140EC	0150EC	0160EC	0170EC	0180EC	0200EC	0210EC	0230EC
General Unit Data									
Unit Capacity at 6.7°C water & 35°C ambient, kW	435	473	520	551	576	601	665	695	746
Number of Independent Refrigerant Circuits	2	2	2	2	2	2	2	2	2
Refrigerant Charge, R-22, Ckt.-1 / Ckt.-2, kg	82 / 82	82 / 82	82 / 86	86 / 86	86 / 86	86 / 86	100 / 100	100 / 100	100 / 100
Oil Charge, Ckt.-1 / Ckt.-2, liters[2]	19 / 19	19 / 19	19 / 19	19 / 19	19 / 19	19 / 19	19 / 19	19 / 19	19 / 19
Shipping Weight:									
Aluminum Fin Coils, kg	4,484	4,585	4,807	4,800	4,850	4,900	5,374	5,429	5,479
Copper Fin Coils, kg	5,059	5,159	5,381	5,374	5,424	5,474	6,096	6,146	6,196
Operating Weight:									
Aluminum Fin Coils, kg	4,678	4,779	5,108	5,101	5,151	5,201	5,675	5,730	5,780
Copper Fin Coils, kg	5,252	5,353	5,682	5,675	5,725	5,776	6,397	6,447	6,498
Compressors, DXS Semihermetic Twin Screw									
Quantity per Chiller	2	2	2	2	2	2	2	2	2
Nominal kW Size, Ckt.-1 / Ckt.-2	220 / 220	240 / 240	275 / 240	275 / 275	275 / 300	300 / 300	335 / 335	335 / 370	370 / 370
Refrigerant Economizer, Ckt.-1 / Ckt.-2	No / No	Yes / Yes	No / Yes	No / No	No / Yes	Yes / Yes	No / No	No / Yes	Yes / Yes
Condensers, High Efficiency Fin / Tube with Integral Subcooler									
Total Chiller Coil Face Area, m²	23.78	23.78	23.78	23.78	23.78	23.78	29.73	29.73	29.73
Number of Rows	3	3	3	3	3	3	3	3	3
Fins per meter	512	512	512	512	512	512	512	512	512
Condenser Fans									
Number, Ckt.-1 / Ckt.-2	4 / 4	4 / 4	4 / 4	4 / 4	4 / 4	4 / 4	5 / 5	5 / 5	5 / 5
Fan Motor, HP / kW	2 / 1.8	2 / 1.8	2 / 1.8	2 / 1.8	2 / 1.8	2 / 1.8	2 / 1.8	2 / 1.8	2 / 1.8
Fan & Motor Speed, revs./sec.	19.0	19.0	19.0	19.0	19.0	19.0	19.0	19.0	19.0
Fan Diameter, mm	900	900	900	900	900	900	900	900	900
Fan Tip Speed, m/sec.	54	54	54	54	54	54	54	54	54
Total Chiller Airflow, l/sec.	53,989	53,989	53,989	53,989	53,989	53,989	67,486	67,486	67,486
vaporator, Direct Expansion									
Water Volume, liters	193	193	301	301	301	301	301	301	301
Maximum[1] Water Side Pressure, Bar	10	10	10	10	10	10	10	10	10
Maximum Refrigerant Side Pressure, Bar	24	24	24	24	24	24	24	24	24
Minimum Chilled Water Flow Rate, l/sec.	9.3	10.7	11.5	11.9	12.8	13.8	14.4	15.5	17.2
Maximum Chilled Water Flow Rate, l/sec.	37.9	37.9	47.1	47.1	47.1	47.1	47.1	47.1	47.1
Water Connections, inches	8	8	8	8	8	8	8	8	8

1 Optional 21 Bar Waterside available
2 See page 35.

PHYSICAL DATA

OPERATING LIMITATIONS – ENGLISH UNITS

		MIN	MAX
LEAVING CHILLED LIQUID TEMP (°F)		40.1	59
CHILLED WATER TEMP DIFFERENCE (°F)		5.5	18
WATER SIDE PRESSURE (PSIG)			150
REFRIGERANT SIDE PRESSURE (PSIG)			300
MODEL YCAS	MINIMUM PRIMARY WATER VOLUME (GALLONS)	COOLER FLOW GALLONS/MINUTE MIN.	MAX.
0130EC	330	147	600
0140EC	357	170	600
0150EC	396	182	747
0160EC	449	188	747
0170EC	476	203	747
0180EC	502	218	747
0200EC	528	228	747
0210EC	555	246	747
0230EC	581	272	747
AIR ENTERING CONDENSER (°F)	STANDARD FANS	0	115*
	HIGH PRESS. FANS	0	115*
	SLOW SPEED FANS	0	115
FAN AVAILABLE STATIC PRESSURE (Pa)	STANDARD FANS		20
	HIGH PRESS. FANS	OPTION 1	85
	HIGH PRESS. FANS	OPTION 2	150
	SLOW SPEED FANS		10
ELECTRICAL THREE PHASE 60 Hz (V)		200	
		230	
		380	
		460	
		575	440

* Maximum Ambient w/ High Ambient Kit is 126°F.

OPERATING LIMITATIONS – SI UNITS

		MIN	MAX
LEAVING CHILLED LIQUID TEMP (°C)		4.5	15
CHILLED WATER TEMP DIFFERENCE (°C)		3	10
WATER SIDE PRESSURE (BAR)		–	10
REFRIGERANT SIDE PRESSURE (BAR)		–	20
MODEL YCAS	MINIMUM PRIMARY WATER VOLUME (LITERS)	COOLER FLOW LITERS/SECOND MIN.	MAX.
0130EC	1249	9	38
0140EC	1351	11	38
0150EC	1499	12	47
0160EC	1700	12	47
0170EC	1802	13	47
0180EC	1900	14	47
0200EC	1999	14	47
0210EC	2101	16	47
0230EC	2199	17	47
AIR ENTERING CONDENSER (°C)	STANDARD FANS	–18	46
	HIGH PRESS. FANS	–18	46
	SLOW SPEED FANS	–18	46
FAN AVAILABLE STATIC PRESSURE (Pa)	STANDARD FANS		20
	HIGH PRESS. FANS	OPTION 1	85
	HIGH PRESS. FANS	OPTION 2	150
	SLOW SPEED FANS		10
ELECTRICAL THREE PHASE 60 Hz (V)		200	
		230	
		380	
		460	
		575	

* Maximum Ambient w/ High Ambient Kit is 52°C.

SOUND POWER DATA (PRELIMINARY)

MODEL YCAS	Lwa dBA
0130EC	105
0140EC	105
0150EC	106
0160EC	106
0170EC	107
0180EC	107
0200EC	107
0210EC	108
0230EC	108

ELECTRICAL DATA

Multiple Point Power Supply Connection

Each of Two Field Provided Power Supply Circuits individually protected with Branch Circuit Protection. Field Connections to Factory provided Terminal Block (Std), Disconnects (Opt), or Breakers (Opt) in each of the two Motor Control Centers.

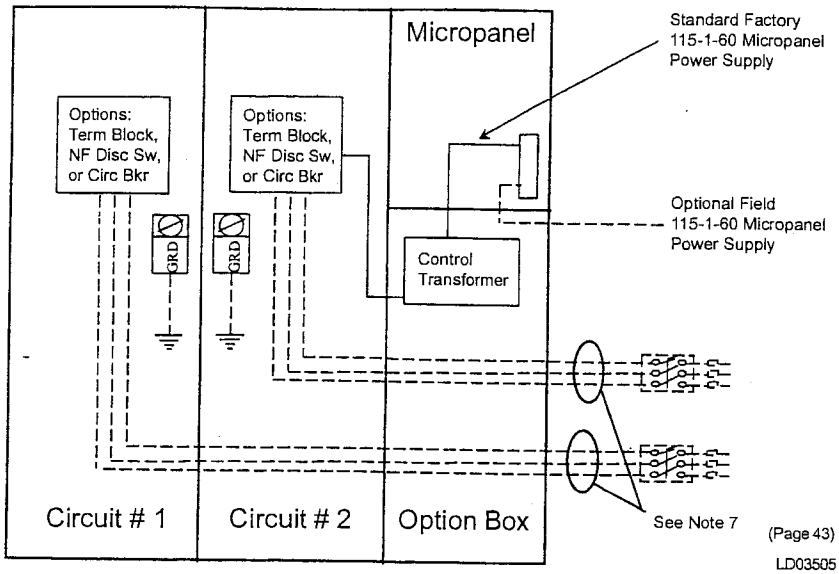

CHILLER MODEL YCAS	VOLTS	SYSTEM #1 FIELD SUPPLIED WIRING												
		FIELD PROVIDED POWER SUPPLY						FACTORY PROVIDED (LUGS) WIRE RANGE			COMPRESSOR DATA			FAN DATA
		MCA[1]	MIN FUSED DISC SW[2]	DUAL ELEM FUSE MIN.[3]	DUAL ELEM FUSE MAX.[4]	CIRCUIT BREAKER MIN.[5]	CIRCUIT BREAKER MAX.[6]	STANDARD TERM. BLOCK	OPT. NF SVC. DISC SWITCH	OPTIONAL CIRCUIT BRKR.	RLA	Y-LRA	X-LRA	FLA (ea.)
0130EC	200	340	400	450	600	450	600	(2) # 2 - 300	(2) 3/0 -250	(3) 2/0 - 400	246	444	1332	8.2
	230	299	400	400	600	400	600	(2) # 2 - 300	(2) 3/0 -250	(2) 3/0 - 250	214	386	1158	7.8
	380	181	200	225	350	225	350	# 2 - 300	# 6 AWG - 350	# 6 AWG - 350	130	234	701	4.8
	460	150	150	200	300	200	300	# 2 - 4/0	# 6 AWG - 350	# 6 AWG - 350	107	193	579	4.0
	575	119	150	150	225	150	225	# 2 - 4/0	# 6 AWG - 350	# 6 AWG - 350	86	154	463	3.1
0140EC	200	366	400	450	700	450	700	(2) # 2 - 300	(2) 3/0 -250	(3) 2/0 - 400	267	444	1332	8.2
	230	321	400	400	600	400	600	(2) # 2 - 300	(2) 3/0 -250	(2) 3/0 - 250	232	386	1158	7.8
	380	195	200	250	350	250	350	# 2 - 300	# 6 AWG - 350	# 6 AWG - 350	140	234	701	4.8
	460	161	200	200	300	200	300	# 2 - 300	# 6 AWG - 350	# 6 AWG - 350	116	193	579	4.0
	575	128	150	175	225	175	225	# 2 - 4/0	# 6 AWG - 350	# 6 AWG - 350	93	154	463	3.1
0150EC	200	402	400	500	700	500	700	(2) # 1 - 500	(2) 3/0 - 250	(3) 2/0 - 400	295	656	1969	8.2
	230	351	400	450	700	450	700	(2) # 2 - 300	(2) 3/0 - 250	(3) 2/0 - 400	256	571	1712	7.8
	380	213	250	300	400	300	400	# 1 - 500	# 6 AWG - 350	(2) 3/0 - 250	155	360	1081	4.8
	460	176	200	225	350	225	350	# 2 - 300	# 6 AWG - 350	# 6 AWG - 350	128	285	856	4.0
	575	141	150	175	250	175	250	# 2 - 4/0	# 6 AWG - 350	# 6 AWG - 350	103	238	715	3.1
0160EC	200	402	400	500	700	500	700	(2) # 1 - 500	(2) 3/0 - 250	(3) 2/0 - 400	295	656	1969	8.2
	230	351	400	450	700	450	700	(2) # 2 - 300	(2) 3/0 - 250	(3) 2/0 - 400	256	571	1712	7.8
	380	213	250	300	400	300	400	# 1 - 500	# 6 AWG - 350	(2) 3/0 - 250	155	360	1081	4.8
	460	176	200	225	350	225	350	# 2 - 300	# 6 AWG - 350	# 6 AWG - 350	128	285	856	4.0
	575	141	150	175	250	175	250	# 2 - 4/0	# 6 AWG - 350	# 6 AWG - 350	103	238	715	3.1
0170EC	200	434	600	600	800	600	800	(2) # 1 - 500	(3) 2/0 - 400	(3) 2/0 - 400	321	656	1969	8.2
	230	380	400	450	700	450	700	(2) # 1 - 500	(2) 3/0 - 250	(3) 2/0 - 400	279	571	1712	7.8
	380	230	250	300	400	300	400	# 1 - 500	# 6 AWG - 350	(2) 3/0 - 250	169	360	1081	4.8
	460	191	200	250	350	250	350	# 2 - 300	# 6 AWG - 350	# 6 AWG - 350	140	295	856	4.0
	575	152	150	200	300	200	300	# 2 - 4/0	# 6 AWG - 350	# 6 AWG - 350	112	238	715	3.1
0180EC	200	434	600	600	800	600	800	(2) # 1 - 500	(3) 2/0 - 400	(3) 2/0 - 400	321	656	1969	8.2
	230	380	400	450	700	450	700	(2) # 1 - 500	(2) 3/0 - 250	(3) 2/0 - 400	279	571	1712	7.8
	380	230	250	300	400	300	400	# 1 - 500	# 6 AWG - 350	(2) 3/0 - 250	169	360	1081	4.8
	460	191	200	250	350	250	350	# 2 - 300	# 6 AWG - 350	# 6 AWG - 350	140	285	856	4.0
	575	152	150	200	300	200	300	# 2 - 4/0	# 6 AWG - 350	# 6 AWG - 350	112	238	715	3.1
0200EC	200	469	600	600	1000	600	1000	(2) # 1 - 500	(3) 2/0 - 400	(3) 2/0 - 400	342	656	1969	8.2
	230	412	400	500	800	500	800	(2) # 1 - 500	(2) 3/0 - 250	(3) 2/0 - 400	298	571	1712	7.8
	380	250	250	300	450	300	450	# 1 - 500	# 6 AWG - 350	(2) 3/0 - 250	181	360	1081	4.8
	460	206	200	250	400	250	400	# 1 - 500	# 6 AWG - 350	# 6 AWG - 350	149	285	856	4.0
	575	164	200	200	300	200	300	# 2 - 300	# 6 AWG - 350	# 6 AWG - 350	119	238	715	3.1
0210EC	200	509	600	700	1000	700	1000	(2) # 1 - 500	(3) 2/0 - 400	(3) 2/0 - 400	374	656	1969	8.2
	230	445	600	600	800	600	800	(2) # 1 - 500	(3) 2/0 - 400	(3) 2/0 - 400	325	571	1712	7.8
	380	270	400	350	500	350	500	# 1 - 500	(2) 3/0 - 250	(2) 3/0 - 250	197	360	1081	4.8
	460	224	250	300	400	300	400	# 1 - 500	# 6 AWG - 350	(2) 3/0 - 250	163	285	856	4.0
	575	178	200	225	350	225	350	# 2 - 300	# 6 AWG - 350	# 6 AWG - 350	130	238	715	3.1
0230EC	200	509	600	700	1000	700	100	(2) # 1 - 500	(3) 2/0 - 400	(3) 2/0 - 400	374	656	1969	8.2
	230	445	600	600	800	600	800	(2) # 1 - 500	(3) 2/0 - 400	(3) 2/0 - 400	325	571	1712	7.8
	380	270	400	350	500	350	500	# 1 - 500	(2) 3/0 - 250	(2) 3/0 - 250	197	360	1081	4.8
	460	224	250	300	400	300	400	# 1 - 500	# 6 AWG - 350	(2) 3/0 - 250	163	285	856	4.0
	575	178	200	225	350	225	350	# 2 - 300	# 6 AWG - 350	# 6 AWG - 350	130	238	715	3.1

CHILLER MODEL YCAS	VOLTS	SYSTEM #2 FIELD SUPPLIED WIRING												
		FIELD PROVIDED POWER SUPPLY						FACTORY PROVIDED (LUGS) WIRE RANGE			COMPRESSOR DATA			FAN DATA
		MCA[1]	MIN FUSED DISC SW[2]	DUAL ELEM FUSE MIN.[3]	DUAL ELEM FUSE MAX.[4]	CIRCUIT BREAKER MIN.[5]	CIRCUIT BREAKER MAX.[6]	STANDARD TERM. BLOCK	OPT. NF SVC. DISC SWITCH	OPTIONAL[11] CIRCUIT BRKR.	RLA	Y-LRA	X-LRA	FLA (ea.)
0130EC	200	340	400	450	600	450	600	(2) # 2 - 300	(2) 3/0 - 250	(3) 2/0 - 400	246	444	1332	8.2
	230	299	400	400	600	400	600	(2) # 2 - 300	(2) 3/0 - 250	(2) 3/0 - 250	214	386	1158	7.8
	380	181	200	225	350	225	350	# 2 - 300	# 6 AWG - 350	# 6 AWG - 350	130	234	701	4.8
	460	150	150	200	300	200	300	# 2 - 4/0	# 6 AWG - 350	# 6 AWG - 350	107	193	579	4.0
	575	119	150	150	225	150	225	# 2 - 4/0	# 6 AWG - 350	# 6 AWG - 350	86	154	463	3.1
0140EC	200	366	400	450	700	450	700	(2) # 2 - 300	(2) 3/0 - 250	(3) 2/0 - 400	267	444	1332	8.2
	230	321	400	400	600	400	600	(2) # 2 - 300	(2) 3/0 - 250	(2) 3/0 - 250	232	386	1158	7.8
	380	195	200	250	350	250	350	# 2 - 300	# 6 AWG - 350	# 6 AWG - 350	140	234	701	4.8
	460	161	200	200	300	200	300	# 2 - 300	# 6 AWG - 350	# 6 AWG - 350	116	193	579	4.0
	575	128	150	175	225	175	225	# 2 - 4/0	# 6 AWG - 350	# 6 AWG - 350	93	154	463	3.1
0150EC	200	363	400	450	700	450	700	(2) # 2 - 300	(2) 3/0 - 250	(3) 2/0 - 400	265	444	1332	8.2
	230	319	400	400	600	400	600	(2) # 2 - 300	(2) 3/0 - 250	(2) 3/0 - 250	230	386	1158	7.8
	380	193	200	250	350	250	350	# 2 - 300	# 6 AWG - 350	# 6 AWG - 350	139	234	701	4.8
	460	160	150	200	300	200	300	# 2 - 300	# 6 AWG - 350	# 6 AWG - 350	115	193	579	4.0
	575	127	150	175	225	175	225	# 2 - 4/0	# 6 AWG - 350	# 6 AWG - 350	92	154	463	3.1
0160EC	200	402	400	500	700	500	700	(2) # 1 - 500	(2) 3/0 - 250	(3) 2/0 - 400	295	656	1969	8.2
	230	351	400	450	700	450	700	(2) # 2 - 300	(2) 3/0 - 250	(3) 2/0 - 400	256	571	1712	7.8
	380	213	200	300	400	300	400	# 1 - 500	# 6 AWG - 350	(2) 3/0 - 250	155	360	1081	4.8
	460	176	200	225	350	225	350	# 2 - 300	# 6 AWG - 350	# 6 AWG - 350	128	285	856	4.0
	575	141	150	175	250	175	250	# 2 - 4/0	# 6 AWG - 350	# 6 AWG - 350	103	238	715	3.1
0170EC	200	402	400	500	700	500	700	(2) # 1 - 500	(2) 3/0 - 250	(3) 2/0 - 400	295	656	1969	8.2
	230	351	400	450	700	450	700	(2) # 2 - 300	(2) 3/0 - 250	(3) 2/0 - 400	256	571	1712	7.8
	380	213	200	300	400	300	400	# 1 - 500	# 6 AWG - 350	(2) 3/0 - 250	155	360	1081	4.8
	460	176	200	225	350	225	350	# 2 - 300	# 6 AWG - 350	# 6 AWG - 350	128	285	856	4.0
	575	141	150	175	250	175	250	# 2 - 4/0	# 6 AWG - 350	# 6 AWG - 350	103	238	715	3.1
0180EC	200	434	600	600	800	600	800	(2) # 1 - 500	(3) 2/0 - 400	(3) 2/0 - 400	321	656	1969	8.2
	230	380	400	450	700	450	700	(2) # 1 - 500	(2) 3/0 - 250	(3) 2/0 - 400	279	571	1712	7.8
	380	230	250	300	400	300	400	# 1 - 500	# 6 AWG - 350	(2) 3/0 - 250	169	360	1081	4.8
	460	191	200	250	350	250	350	# 2 - 300	# 6 AWG - 350	# 6 AWG - 350	140	285	856	4.0
	575	152	150	200	300	200	300	# 2 - 4/0	# 6 AWG - 350	# 6 AWG - 350	112	238	715	3.1
0200EC	200	469	600	600	1000	600	1000	(2) # 1 - 500	(3) 2/0 - 400	(3) 2/0 - 400	342	656	1969	8.2
	230	412	400	500	800	500	800	(2) # 1 - 500	(2) 3/0 - 250	(3) 2/0 - 400	298	571	1712	7.8
	380	250	250	300	450	300	450	# 1 - 500	# 6 AWG - 350	(2) 3/0 - 250	181	360	1081	4.8
	460	206	200	250	400	250	400	# 1 - 500	# 6 AWG - 350	# 6 AWG - 350	149	285	856	4.0
	575	164	200	200	300	200	300	# 2 - 300	# 6 AWG - 350	# 6 AWG - 350	119	238	715	3.1
0210EC	200	469	600	600	1000	600	1000	(2) # 1 - 500	(3) 2/0 - 400	(3) 2/0 - 400	342	656	1969	8.2
	230	412	400	500	800	500	800	(2) # 1 - 500	(2) 3/0 - 250	(3) 2/0 - 400	298	571	1712	7.8
	380	250	250	300	450	300	450	# 1 - 500	# 6 AWG - 350	(2) 3/0 - 250	181	360	1081	4.8
	460	206	200	250	400	250	400	# 1 - 500	# 6 AWG - 350	# 6 AWG - 350	149	285	856	4.0
	575	164	200	200	300	200	300	# 2 - 300	# 6 AWG - 350	# 6 AWG - 350	119	238	715	3.1
0230EC	200	509	600	700	1000	700	1000	(2) # 1 - 500	(3) 2/0 - 400	(3) 2/0 - 400	374	656	1969	8.2
	230	445	600	600	800	600	800	(2) # 1 - 500	(3) 2/0 - 400	(3) 2/0 - 400	325	571	1712	7.8
	380	270	400	350	500	350	500	# 1 - 500	(2) 3/0 - 250	(2) 3/0 - 250	197	360	1081	4.8
	460	224	250	300	400	300	400	# 1 - 500	# 6 AWG - 350	(2) 3/0 - 250	163	285	856	4.0
	575	178	200	225	350	225	350	# 2 - 300	# 6 AWG - 350	# 6 AWG - 350	130	238	715	3.1

YCAS-"F" Electrical Data Table Footnotes

1. Minimum circuit ampacity (MCA) is based on 125% of the rated load amps for the largest motor plus 100% of the rated load amps for all other loads included in the circuit, per N.E.C. Article 430-24. If a Factory Mounted Control Transformer is provided, add the following to the system #1MCA values in the YCAS Tables: -17, add 10 amps; -28, add 9 amps; -40, add 5 amps; -46, add 4 amps; -58, add 3 amps.
2. The recommendation disconnect switch is based on a minimum of 115% of the summation rated load amps of all the loads included in the circuit, per N.E.C. 440 - 12A1.
3. Minimum fuse size is based on 150% of the largest motor RLA plus 100% of the remaining RLAs (U.L. Standard 1995, Section 36.1). Minimum fuse rating = (1.5 x largest compressor RLA) + other compressor RLAs + (# fans x each fan motor FLA).
4. Maximum dual element fuse size is based on 225% maximum plus 100% of the rated load amps for all other loads included in the circuit, per N.E.C. 440-22. Maximum fuse rating = (2.25 x largest compressor RLA) + other compressor RLAs + (# fans x each fan motor FLA).
5. Minimum circuit breaker is 150% maximum plus 100% of rated load amps included in the circuit, per circuit per U.L. 1995 Fig. 36.2. Minimum circuit breaker rating = (1.5 x largest compressor RLA) + other compressor RLAs + (# fans x each fan motor FLA).
6. Maximum circuit breaker is based on 225% maximum plus 100% of the rated load amps for all loads included in the circuit, per circuit, per U.L. 1995 Fig. 36.2. Maximum circuit breaker rating = (2.25 x largest compressor RLA) + other compressor RLAs + (# fans x each fan motor FLA).
7. The Incoming Wire Range is the minimum and maximum wire size that can be accommodated by unit wiring lugs. The (1), (2), or (3) indicate the number of termination points or lugs which are available per phase. Actual wire size and number of wires per phase must be determined based on ampacity and job requirements using N.E.C. wire sizing information. The above recommendations are based on the National Electric Code and using copper connectors only. Field wiring must also comply with local codes.
8. A ground lug is provided for each compressor system to accommodate field grounding conductor per N.E.C. Article 250-54. A control circuit grounding lug is also supplied. Incoming ground wire range is #6 - 350 MCM.
9. The field supplied disconnect is a "Disconnecting Means" as defined in N.E.C. 100.B, and is intended for isolating the unit from the available power supply to perform maintenance and troubleshooting. This disconnect is not intended to be a Load Break Device.
10. Units equipped with Star-Delta compressor motor start must also include Factory provided circuit breakers in each motor control center.

Optional Single Point Power Supply Connection and Internal Unit Circuit Breakers

One Field Provided Power Supply Circuit to the chiller. Field connections to Power Terminal Block or Non-Fused Disconnect in 'Option Panel'. Internal Branch Circuit Protection (Breakers) per Motor Control Center.

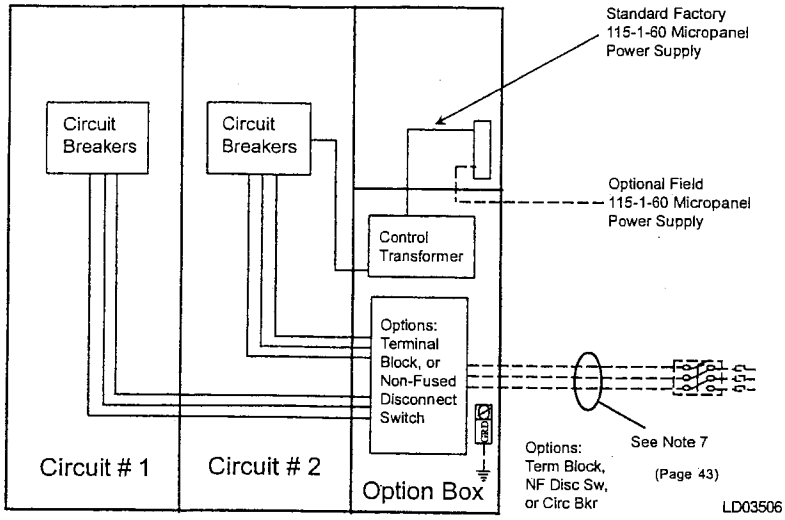

CHILLER MODEL YCAS	VOLTS	FIELD SUPPLIED WIRING									
		FIELD PROVIDED POWER SUPPLY						FACTORY PROVIDED (LUGS) WIRE RANGE			
		MCA[1]	MIN NF DISC SW[2]	DUAL ELEM FUSE		CIRCUIT BREAKER		TERMINAL BLOCK		NF SVC. DISC. SWITCH	
				MIN.[3]	MAX.[4]	MIN.[5]	MAX.[6]	(LUGS) WIRE RANGE[7]	RATING[2]	(LUGS) WIRE RANGE[7]	RATING[2]
0130EC	200	619	800	700	1000	700	1000	(3) # 1 - 500	1140	(3) 2/0 - 400	800
	230	544	600	600	800	600	800	(2) # 1 - 500	760	(3) 2/0 - 400	630
	380	330	400	400	500	400	500	(2) # 2 - 300	550	(2) 3/0 - 250	400
	460	273	400	300	400	300	400	# 1 - 500	380	(2) 3/0 - 250	400
	575	217	250	250	350	250	350	# 1 - 500	380	# 6 AWG - 350	250
0140EC	200	666	800	800	1000	800	1000	(3) # 1 - 500	1140	(3) 2/0 - 400	800
	230	584	800	700	1000	700	1000	(3) # 1 - 500	1140	(3) 2/0 - 400	630
	380	354	400	400	500	400	500	(2) # 2 - 300	550	(2) 3/0 - 250	400
	460	293	400	350	450	350	450	(2) # 2 - 300	550	(2) 3/0 - 250	400
	575	234	250	300	350	300	350	# 1 - 500	380	# 6 AWG - 350	250
0150EC	200	699	800	800	1000	800	1000	(3) # 1 - 500	1140	(3) 2/0 - 400	800
	230	612	800	700	1000	700	1000	(3) # 1 - 500	1140	(3) 2/0 - 400	800
	380	371	400	450	600	450	600	(2) # 1 - 500	760	(2) 3/0 - 250	400
	460	307	400	350	450	350	450	(2) # 2 - 300	550	(2) 3/0 - 250	400
	575	246	400	300	350	300	350	# 1 - 500	380	(2) 3/0 - 250	400
0160EC	200	729	800	1000	1200	1000	1200	(3) # 1 - 500	1140	(3) 2/0 - 400	800
	230	638	800	800	1000	800	1000	(3) # 1 - 500	1140	(3) 2/0 - 400	800
	380	387	600	450	600	450	600	(2) # 1 - 500	760	(3) 2/0 - 400	630
	460	320	400	400	450	400	450	(2) # 2 - 300	550	(2) 3/0 - 250	400
	575	257	400	300	400	300	400	# 1 - 500	380	(2) 3/0 - 250	400
0170EC	200	762	800	1000	1200	1000	1200	(3) # 1 - 500	1140	(3) 2/0 - 400	800
	230	667	800	800	1000	800	1000	(3) # 1 - 500	1140	(3) 2/0 - 400	800
	380	405	600	450	600	450	600	(2) # 1 - 500	760	(3) 2/0 - 400	630
	460	335	400	400	500	400	500	(2) # 2 - 300	550	(2) 3/0 - 250	400
	575	268	400	300	400	300	400	# 1 - 500	380	(2) 3/0 - 250	400
0180EC	200	788	1000	1000	1200	1000	1200	(3) # 1 - 500	1140	(4) 4/0 - 500	1000
	230	690	800	800	1000	800	1000	(3) # 1 - 500	1140	(3) 2/0 - 400	800
	380	419	600	500	600	500	600	(2) # 1 - 500	760	(3) 2/0 - 400	630
	460	347	400	400	500	400	500	(2) # 2 - 300	550	(2) 3/0 - 250	400
	575	277	400	350	400	350	400	(2) # 2 - 300	550	(2) 3/0 - 250	400
0200EC	200	852	1000	1000	1200	1000	1200	(3) # 1 - 500	1140	(4) 4/0 - 500	100
	230	749	800	1000	1200	1000	1200	(3) # 1 - 500	1140	(3) 2/0 - 400	800
	380	455	600	600	700	600	700	(2) # 1 - 500	760	(3) 2/0 - 400	630
	460	375	400	450	600	450	600	(2) # 1 - 500	760	(2) 3/0 - 250	400
	575	299	400	350	450	350	450	(2) # 2 - 300	550	(2) 3/0 - 250	400
0210EC	200	892	1000	1000	1600	1000	1600	(3) # 1 - 500	1140	(4) 4/0 - 500	1000
	230	782	1000	1000	1200	1000	1200	(3) # 1 - 500	1140	(4) 4/0 - 500	1000
	380	475	600	600	700	600	700	(2) # 1 - 500	760	(3) 2/0 - 400	630
	460	393	600	450	600	450	600	(2) # 1 - 500	760	(3) 2/0 - 400	630
	575	313	400	350	450	350	450	(2) # 2 - 300	550	(2) 3/0 - 250	400
0230EC	200	924	1000	1200	1600	1200	1600	(3) # 1 - 500	1140	(4) 4/0 - 500	1000
	230	809	1000	1000	1200	1000	1200	(3) # 1 - 500	1140	(4) 4/0 - 500	100
	380	491	600	600	700	600	700	(2) # 1 - 500	760	(3) 2/0 - 400	630
	460	407	600	450	600	450	600	(2) # 1 - 500	760	(3) 2/0 - 400	630
	575	324	400	400	500	400	500	(2) # 2 - 300	550	(2) 3/0 - 250	400

CHILLER MODEL YCAS	VOLTS	SYSTEM # 1					SYSTEM # 2				
		FACTORY CIRCUIT BREAKER	COMPRESSOR DATA			FAN DATA	FACTORY CIRCUIT BREAKER	COMPRESSOR DATA			FAN DATA
			RLA	Y-LRA	X-LRA	FLA (ea)		RLA	Y-LRA	X-LRA	FLA (ea)
0130EC	200	630	246	444	1332	8.2	630	246	444	1332	8.2
	230	400	214	386	1158	7.8	400	214	386	1158	7.8
	380	250	130	234	701	4.8	250	130	234	701	4.8
	460	250	107	193	579	4.0	250	107	193	579	4.0
	575	160	86	154	463	3.1	160	86	154	463	3.1
0140EC	200	630	267	444	1332	8.2	630	267	444	1332	8.2
	230	400	232	386	1158	7.8	400	232	386	1158	7.8
	380	250	140	234	701	4.8	250	140	234	701	4.8
	460	250	116	193	579	4.0	250	116	193	579	4.0
	575	160	93	154	463	3.1	160	93	154	463	3.1
0150EC	200	630	295	656	1969	8.2	630	265	444	1332	8.2
	230	630	256	571	1712	7.8	400	230	386	1158	7.8
	380	400	155	360	1081	4.8	250	139	234	701	4.8
	460	250	128	285	856	4.0	250	115	193	579	4.0
	575	250	103	238	715	3.1	160	92	154	463	3.1
0160EC	200	630	295	656	1969	8.2	630	295	656	1969	8.2
	230	630	256	571	1712	7.8	630	256	571	1712	7.8
	380	400	155	360	1081	4.8	400	155	360	1081	4.8
	460	250	128	285	856	4.0	250	128	285	856	4.0
	575	250	103	238	715	3.1	250	103	238	715	3.1
0170EC	200	630	321	656	1969	8.2	630	295	656	1969	8.2
	230	630	279	571	1712	7.8	630	256	571	1712	7.8
	380	400	169	360	1081	4.8	400	155	360	1081	4.8
	460	250	140	285	856	4.0	250	128	285	856	4.0
	575	250	112	238	715	3.1	250	103	238	715	3.1
0180EC	200	630	321	656	1969	8.2	630	321	656	1969	8.2
	230	630	279	571	1712	7.8	630	279	571	1712	7.8
	380	400	169	360	1081	4.8	400	169	360	1081	4.8
	460	250	140	285	856	4.0	250	140	285	856	4.0
	575	250	112	238	715	3.1	250	112	238	715	3.1
0200EC	200	630	342	656	1969	8.2	630	342	656	1969	8.2
	230	630	298	571	1712	7.8	630	298	571	1712	7.8
	380	400	181	360	1081	4.8	400	181	360	1081	4.8
	460	250	149	285	856	4.0	250	149	285	856	4.0
	575	250	119	238	715	3.1	250	119	238	715	3.1
0210EC	200	630	374	656	1969	8.2	630	342	656	1969	8.2
	230	630	325	571	1712	7.8	630	298	571	1712	7.8
	380	400	197	360	1081	4.8	400	181	360	1081	4.8
	460	400	163	285	856	4.0	250	149	285	856	4.0
	575	250	130	238	715	3.1	250	119	238	715	3.1
0230EC	200	630	374	656	1969	8.2	630	374	656	1969	8.2
	230	630	325	571	1712	7.8	630	325	571	1712	7.8
	380	400	197	360	1081	4.8	400	197	360	1081	4.8
	460	400	163	285	856	4.0	400	163	285	856	4.0
	575	250	130	238	715	3.1	250	130	238	715	3.1

Optional Single Point Power Supply Connection with Field Supplied Circuit Protection

One Field Provided Power Supply Circuit to the chiller. Field Connection to Power Terminal Block or Disconnect Switch in the 'Option Panel'.

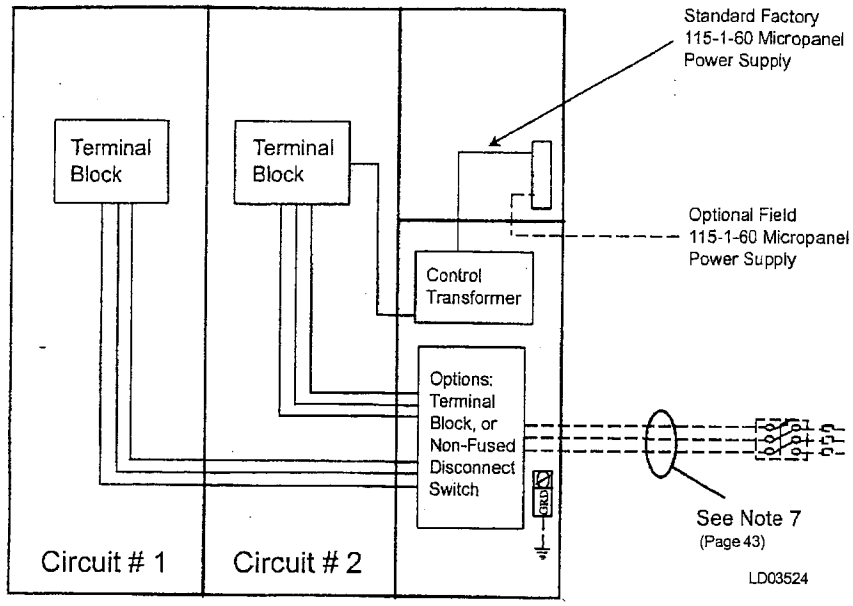

CHILLER MODEL YCAS	VOLTS	FIELD SUPPLIED WIRING							SYSTEM #1			SYSTEM #2		
		FIELD PROVIDED PWR SUPPLY				FACTORY PROVIDED (LUGS) WIRE RANGE			COMPRESSOR DATA		FANS DATA	COMPRESSOR DATA		FANS DATA
		MCA[1]	MIN NF DISC SW[2]	DUAL ELEM. FUSE MIN.[3]	DUAL ELEM. FUSE MAX.[4]	TERMINAL BLOCK (LUGS) WIRE RANGE[7]	NF SERVICE DISC. SWITCH RATING[2]	NF SERVICE DISC. SWITCH (LUGS) WIRE RANGE[7]	RLA	X-LRA	FLA (ea.)	RLA	X-LRA	FLA (ea.)
30EC	460	273	400	300	400	# 1 - 500	400	(2) 3/0 - 250	107	579	4.0	107	579	4.0
	575	217	250	250	350	# 1 - 500	250	# 6 AWG - 350	86	463.2	3.1	86	463	3.1
0140EC	460	293	400	350	450	(2) # 2 - 300	400	(2) 3/0 - 250	116	579	4.0	116	579	4.0
	575	234	250	300	350	# 1 - 500	250	# 6 AWG - 350	93	463.2	3.1	93	463	3.1
0150EC	460	307	400	350	450	(2) # 2 - 300	400	(2) 3/0 - 250	128	856	4.0	115	579	4.0
	575	246	400	300	350	# 1 - 500	250	# 6 AWG - 350	103	715	3.1	92	463	3.1
0160EC	460	320	400	400	450	(2) # 2 - 300	400	(2) 3/0 - 250	128	856	4.0	128	856	4.0
	575	257	400	300	400	# 1 - 500	400	(2) 3/0 - 250	103	715	3.1	103	715	3.1
0170EC	460	335	400	400	500	(2) # 2 - 300	400	(2) 3/0 - 250	140	856	4.0	128	856	4.0
	575	268	400	300	400	# 1 - 500	400	(2) 3/0 - 250	112	715	3.1	103	715	3.1
0180EC	460	347	400	400	500	(2) # 2 - 300	400	(2) 3/0 - 250	140	856	4.0	140	856	4.0
	575	277	400	350	400	(2) # 2 - 300	400	(2) 3/0 - 250	112	715	3.1	112	715	3.1
0200EC	460	375	400	450	600	(2) # 1 - 500	400	(2) 3/0 - 250	149	856	4.0	149	856	4.0
	575	299	400	350	450	(2) # 2 - 300	400	(2) 3/0 - 250	119	715	3.1	119	715	3.1
0210EC	460	393	600	450	600	(2) # 1 - 500	400	(2) 3/0 - 250	163	856	4.0	149	856	4.0
	575	313	400	350	450	(2) # 2 - 300	400	(2) 3/0 - 250	130	715	3.1	119	715	3.1
0230EC	460	407	600	450	600	(2) # 1 - 500	630	(3) - 2/0 - 400	163	856	4.0	163	856	4.0
	575	324	400	400	500	(2) # 2 - 300	400	(2) 3/0 - 250	130	715	3.1	130	715	3.1

Optional Single Point Power Supply Connection to Factory Circuit Breaker

One Field Provided Power Supply Circuit to the chiller. Field Connection to Circuit Breaker in the 'Option Panel'.

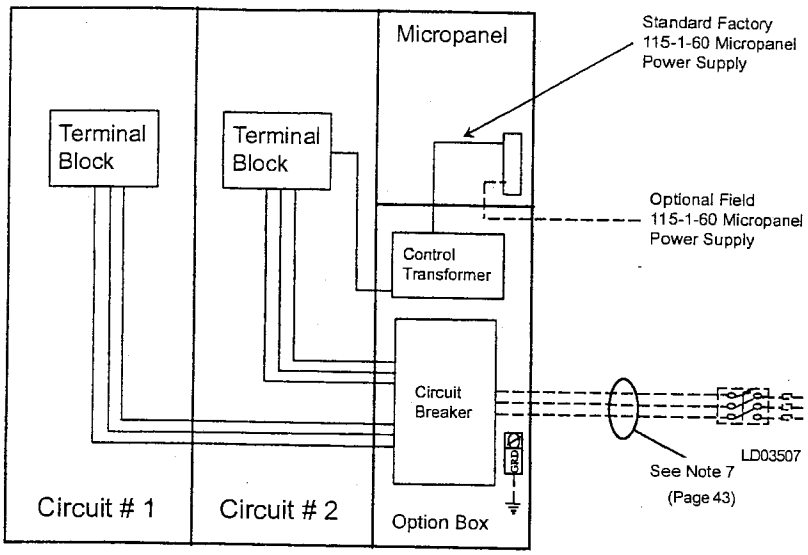

CHILLER MODEL YCAS	VOLTS	FIELD SUPPLIED WIRING			SYSTEM #1			SYSTEM #2		
		MCA[1]	FACTORY SUPPLIED BREAKER		COMPRESSOR		FANS	COMPRESSOR		FANS
			RATING[2]	WIRE RANGE[7] (LUGS)	RLA	X-LRA	FLA (ea)	RLA	X-LRA	FLA (ea)
0130EC	460	273	400	(2) 3/0 - 250	107	579	4.0	107	579	4.0
	575	217	250	# 6 AWG -150	86	463	3.1	86	463	3.1
0140EC	460	293	400	(2) 3/0 - 250	116	579	4.0	116	579	4.0
	575	234	400	(2) 3/0 - 250	93	463	3.1	93	463	3.1
0150EC	460	307	400	(2) 3/0 - 250	128	856	4.0	115	579	4.0
	575	246	400	(2) 3/0 - 250	103	715	3.1	92	463	3.1
0160EC	460	320	400	(2) 3/0 - 250	128	856	4.0	128	856	4.0
	575	257	400	(2) 3/0 - 250	103	715	3.1	103	715	3.1
0170EC	460	335	400	(2) 3/0 - 250	140	856	4.0	128	856	4.0
	575	268	400	(2) 3/0 - 250	112	715	3.1	103	715	3.1
0180EC	460	347	400	(2) 3/0 - 250	140	856	4.0	140	856	4.0
	575	277	400	(2) 3/0 - 250	112	715	3.1	112	715	3.1
0200EC	460	375	630	(3) 2/0 - 400	149	856	4.0	149	856	4.0
	575	299	400	(2) 3/0 - 250	119	715	3.1	119	715	3.1
0210EC	460	393	630	(3) 2/0 - 400	163	856	4.0	149	856	4.0
	575	313	400	(2) 3/0 - 250	130	715	3.1	119	715	3.1
0230EC	460	407	630	(3) 2/0 - 400	163	856	4.0	163	856	4.0
	575	324	400	(2) 3/0 - 250	130	715	3.1	130	715	3.1

COMPRESSOR DATA

MAXIMUM KW AND AMPEREGE VALUES FOR DXST COMPRESSORS																		
	COMPRESSOR MODEL AND VOLTAGE CODE																	
	DXS45LA - MOTOR CODE A (B5N, B5E, B6N, B6E)						DXS36LA - MOTOR CODE A (A5N, A5E, A6N, A6E)						DXS24LA - MOTOR CODE (TBD) (C5N, C5E, C6N, C6E)					
VOLTAGE CODE	-17	-28	-40	-46	-50	-58	-17	-28	-40	-46	-50	-58	-17	-28	-40	-46	-50	-58
MAX KW	150	150	150	150	113	150	150	150	150	150	113	150	105	105	105	105	80	105
MAX AMPS	492	428	259	214	193	171	492	428	259	214	193	171	338	294	178	147	135	118

FAN DATA

FAN TYPE	NOMINAL POWER (kW)	FULL LOAD AMPS (FLA)	LOCKED ROTOR AMPS (LRA)
STANDARD	1, 57	4, 4	18, 0
HIGH PRESSURE	3, 7	6, 8	46, 3

WIRING DIAGRAM
ACROSS-THE-LINE START

NOTES:

1. Field wiring to be in accordance with the current edition of the National Electrical Code as well as all other applicable codes and specifications.
2. Numbers along the right side of a diagram are line identification numbers. The numbers at each line indicate the line number location of relay contacts. An unlined contact location signifies a normally closed contact. Numbers adjacent to circuit lines are the circuit identification numbers.
3. Any customer supplied contacts must be suitable for switching 24VDC. (Gold contacts recommended.) Control Wiring must not be run in the same conduit with any line voltage wiring.
4. To cycle unit ON and OFF automatically with contact shown, install a cycling device in series with the flow switch (FSLW). See Note 3 for contact rating and wiring specifications. Also refer to cautions on page 51.
5. To stop unit (Emergency Stop) with contacts other than those shown, install the stop contact between 5 and 1. If a stop device is not installed, a jumper must be connected between terminals 5 and 1. Device must have a minimum contact rating of 100VA at 115 volts A.C.
6. Alarm contacts are for annunciating alarm/unit malfunction. Contacts are rated at 115V, 100VA, resistive load only, and must be suppressed at load by user.
7. See Installation, Operation and Maintenance Manual when optional equipment is used.
8. Control panel to be securely connected to earth ground.
9. Us 2KVA transformer in optional transformer kit unless there are optional oil separator sump heaters which necessitates using a 3KVA transformer.

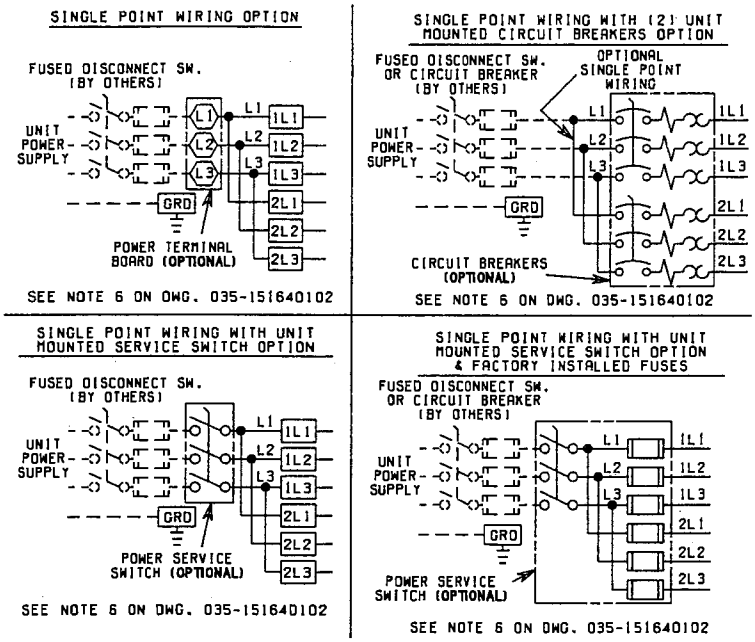

LD03226

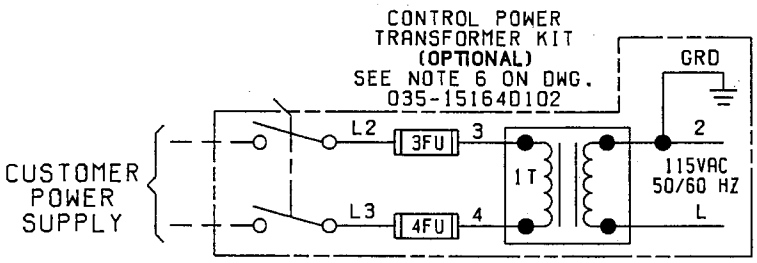

LD03227

LEGEND

T S	Transient Voltage Suppression
⬡	Terminal Block for Customer Connections
△	Terminal Block for Customer Low Voltage (Class 2) Connections. See Note 2
▭	Terminal Block for YORK Connections Only
———	Wiring and Components by YORK
—·—·—	Optional Equipment
— — —	Wiring and/or Components by Others

FIG. 12 – ELEMENTARY DIAGRAM – ACROSS-THE-LINE START

WIRING DIAGRAM
ACROSS-THE-LINE START

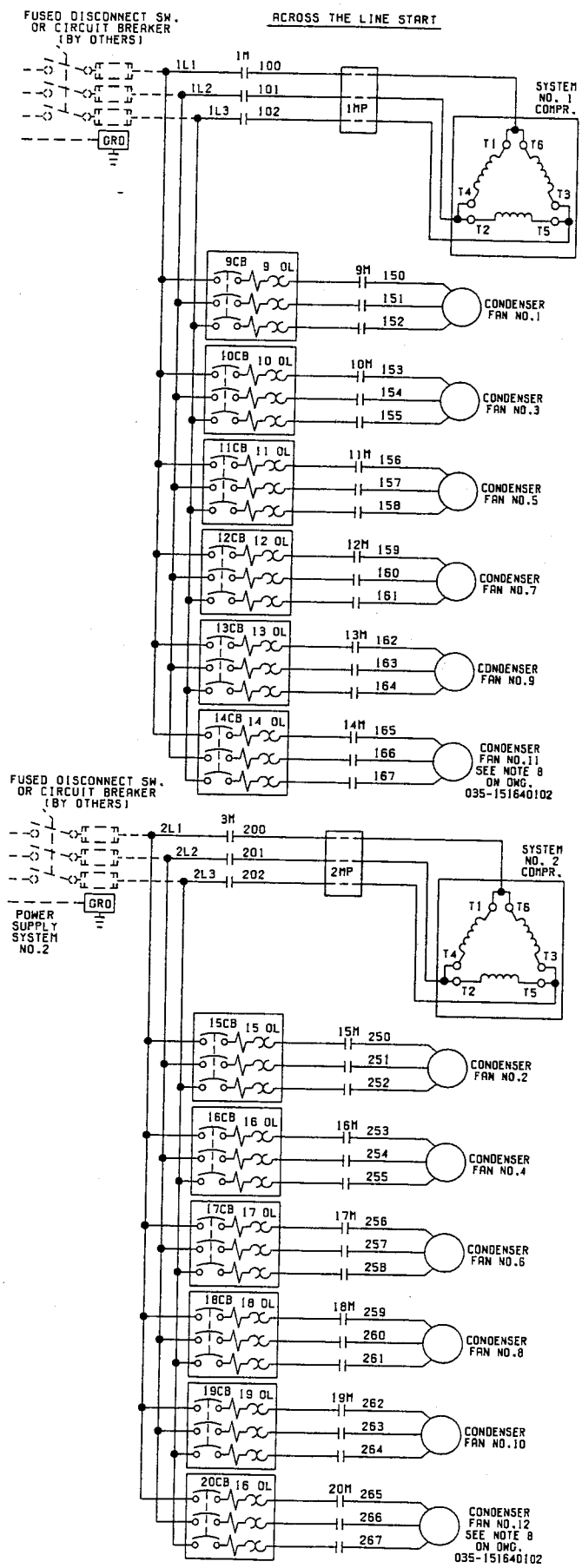

ELEMENTARY DIAGRAM

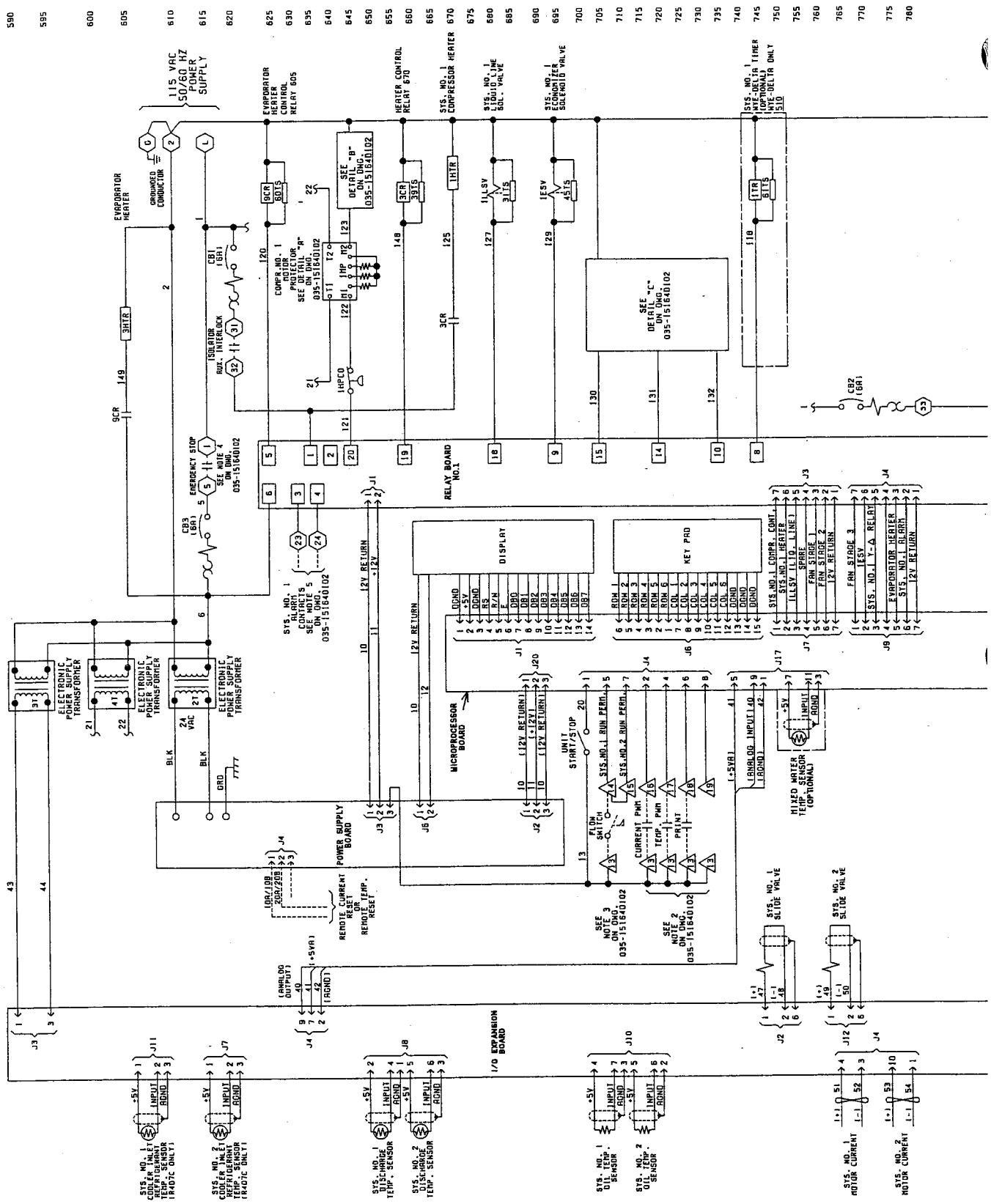

FIG. 12 – CONTINUED

ELEMENTARY DIAGRAM

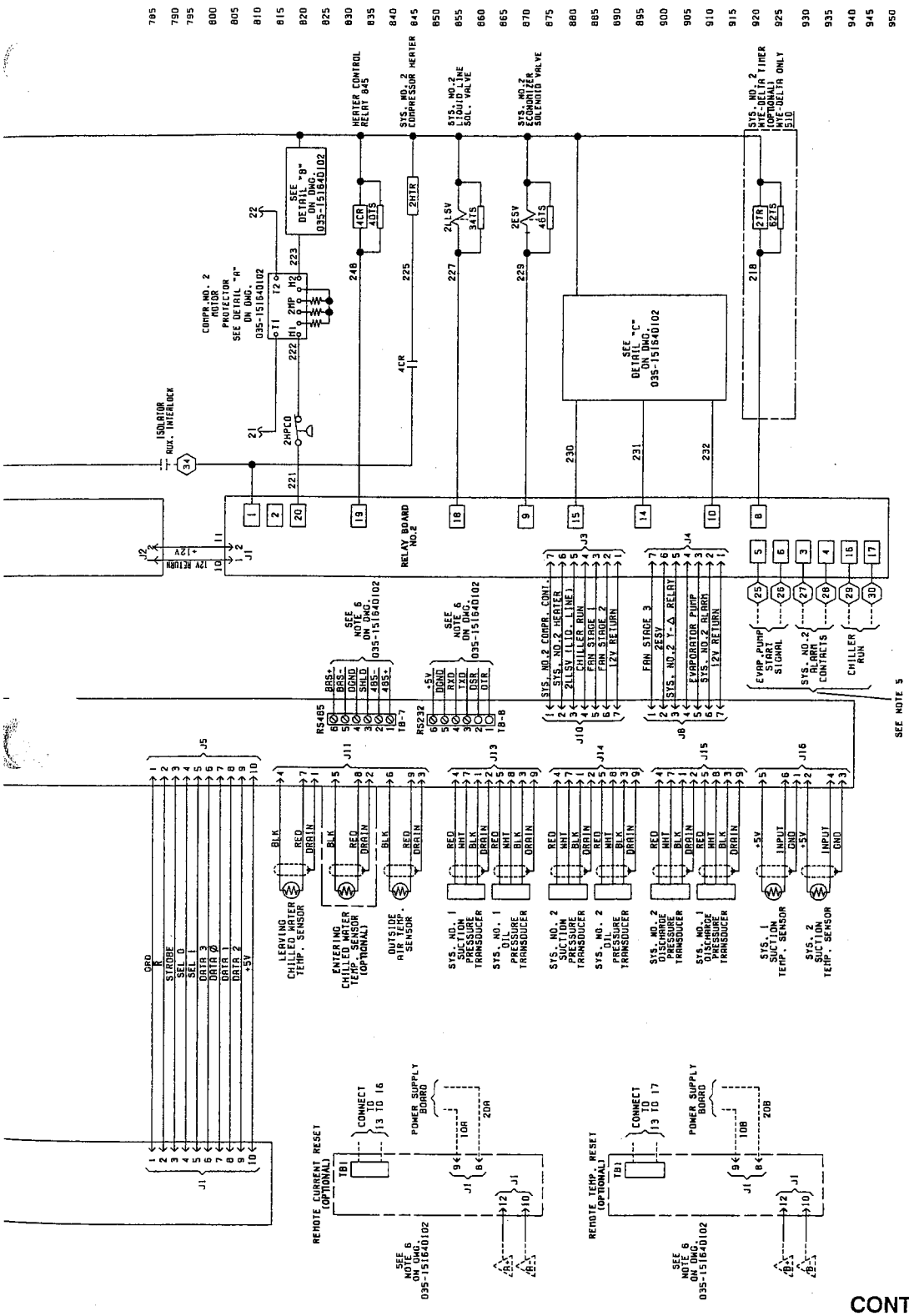

CAUTION:
No Controls (relays, etc.) should be mounted in the Smart Panel enclosure or connected to power supplies in the control panel. Additionally, control wiring not connected to the Smart Panel should not be run through the cabinet. This could result in nuisance faults.

CAUTION:
Any inductive devices (relays) wired in series with the flow switch for start/stop, into the Alarm circuitry, or pilot relays for pump starters wired through motor contactor auxiliary contacts must be suppressed with YORK P/N 031-00808-000 suppressor across the relay/contactor coil.

Any contacts connected to flow switch inputs or BAS inputs on terminals 13 - 19 or TB3, or any other terminals, must be suppressed with a YORK P/N 031-00808-000 suppressor across the relay/contactor coil.

CAUTION:
Control wiring connected to the control panel should never be run in the same conduit with power wiring.

CONTROL POWER SUPPLY

UNIT VOLTAGE		CONTROL POWER SUPPLY	MIN CIRCUIT AMP.	MAX DUAL ELEMENT FUSE SIZE	NON-FUSED DISC. SWITCH SIZE
ALL MODELS W/O TRANS.		115-1-50/60	20A	20A 250V	30A 240V
MODELS	-17	200-1-60	15A	15A 250V	30A 240V
WITH	-28	230-1-60	15A	15A 250V	30A 240V
TRANS.	-46	400-1-60	8A	8A 600V	30A 480V
*	-58	575-1-60	8A	8A 600V	30A 600V

* All primary and secondary wiring between transformer and control panel included.

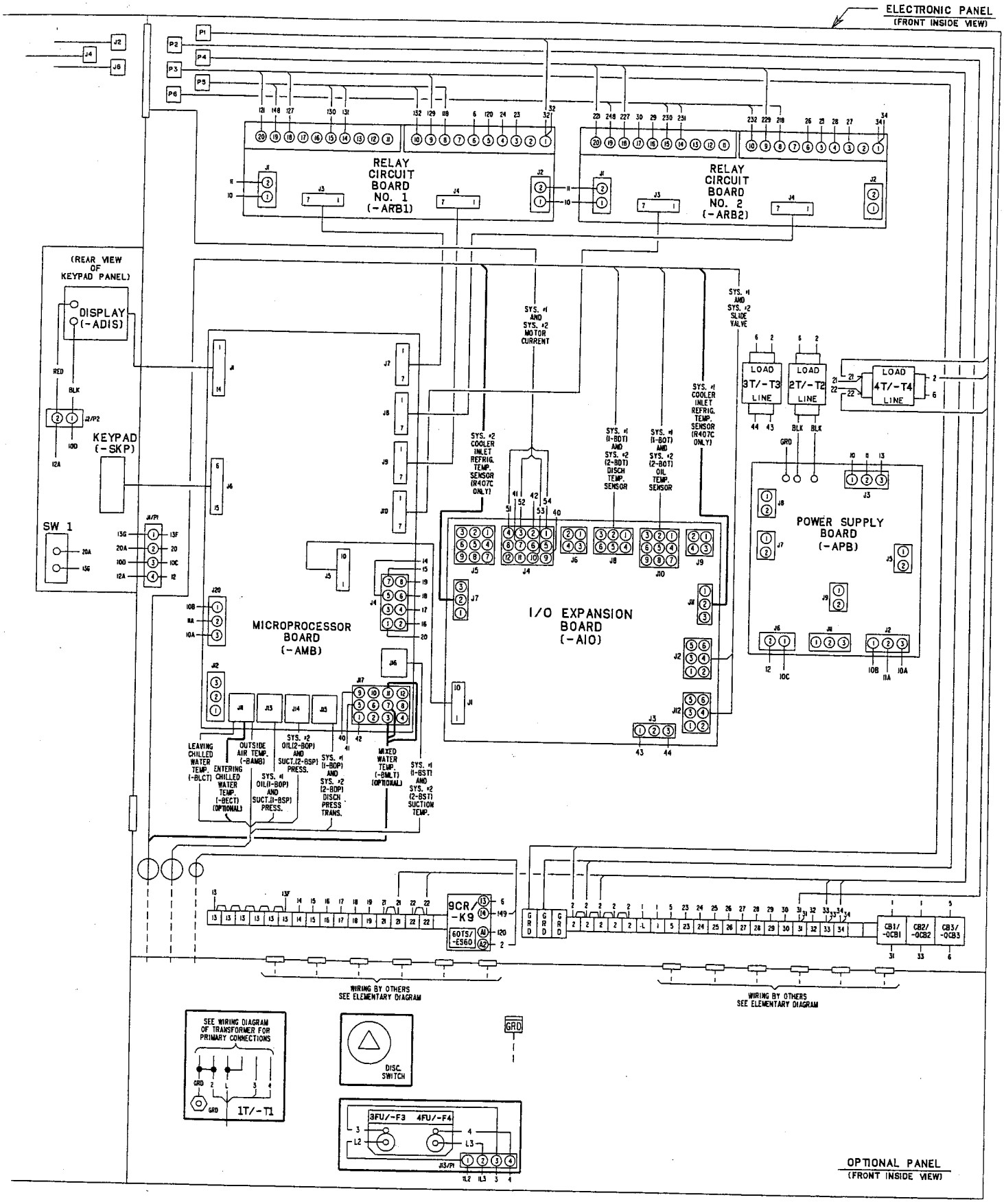

LD03280

FIG. 14 – ELECTRONIC PANEL (FRONT INSIDE VIEW) – ACROSS-THE-LINE START

WIRING DIAGRAM
WYE-DELTA START

NOTES:

1. Field wiring to be in accordance with the current edition of the National Electrical Code as well as all other applicable codes and specifications.
2. Numbers along the right side of a diagram are line identification numbers. The numbers at each line indicate the line number location of relay contacts. An unlined contact location signifies a normally closed contact. Numbers adjacent to circuit lines are the circuit identification numbers.
3. Any customer supplied contacts must be suitable for switching 24VDC. (Gold contacts recommended.) Control Wiring must not be run in the same conduit with any line voltage wiring.
4. To cycle unit ON and OFF automatically with contact shown, install a cycling device in series with the flow switch (FSLW). See Note 3 for contact rating and wiring specifications. Also refer to cautions on the page 55.
5. To stop unit (Emergency Stop) with contacts other than those shown, install the stop contact between 5 and 1. If a stop device is not installed, a jumper must be connected between terminals 5 and 1. Device must have a minimum contact rating of 100VA at 115 volts A.C.
6. Alarm contacts are for annunciating alarm/unit malfunction. Contacts are rated at 115V, 100VA, resistive load only, and must be suppressed at load by user.
7. See Installation, Operation and Maintenance Manual when optional equipment is used.
8. Control panel to be securely connected to earth ground.
9. Us 2KVA transformer in optional transformer kit unless there are optional oil separator sump heaters which necessitates using a 3KVA transformer.

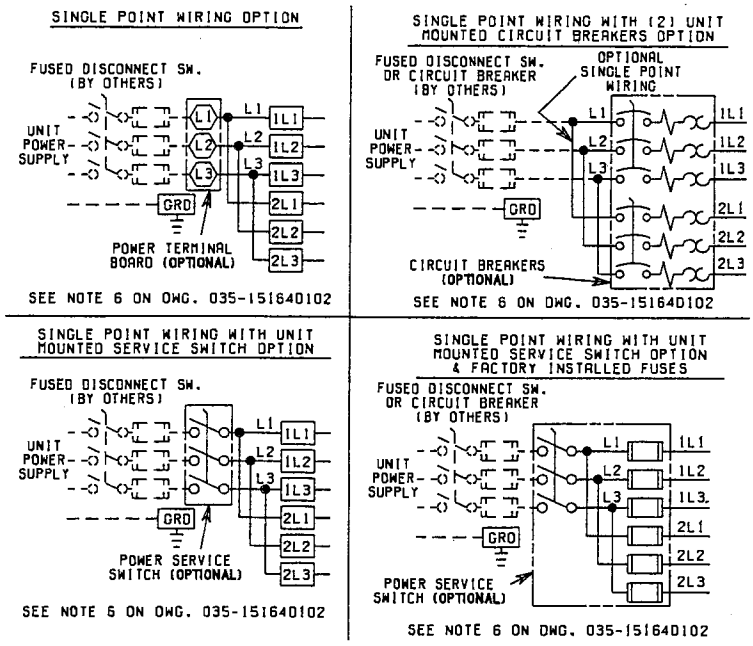

LD03226

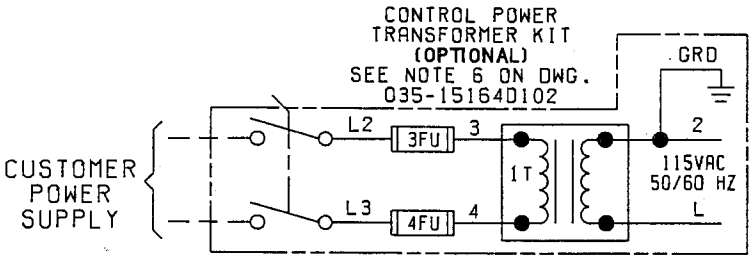

LD03227

LEGEND

T S	Transient Voltage Suppression
⬡	Terminal Block for Customer Connections
△	Terminal Block for Customer Low Voltage (Class 2) Connections. See Note 2
▭	Terminal Block for YORK Connections Only
———	Wiring and Components by YORK
— — —	Optional Equipment
— — —	Wiring and/or Components by Others

FIG. 15 – ELEMENTARY DIAGRAM – WYE-DELTA START

WIRING DIAGRAM
WYE-DELTA START

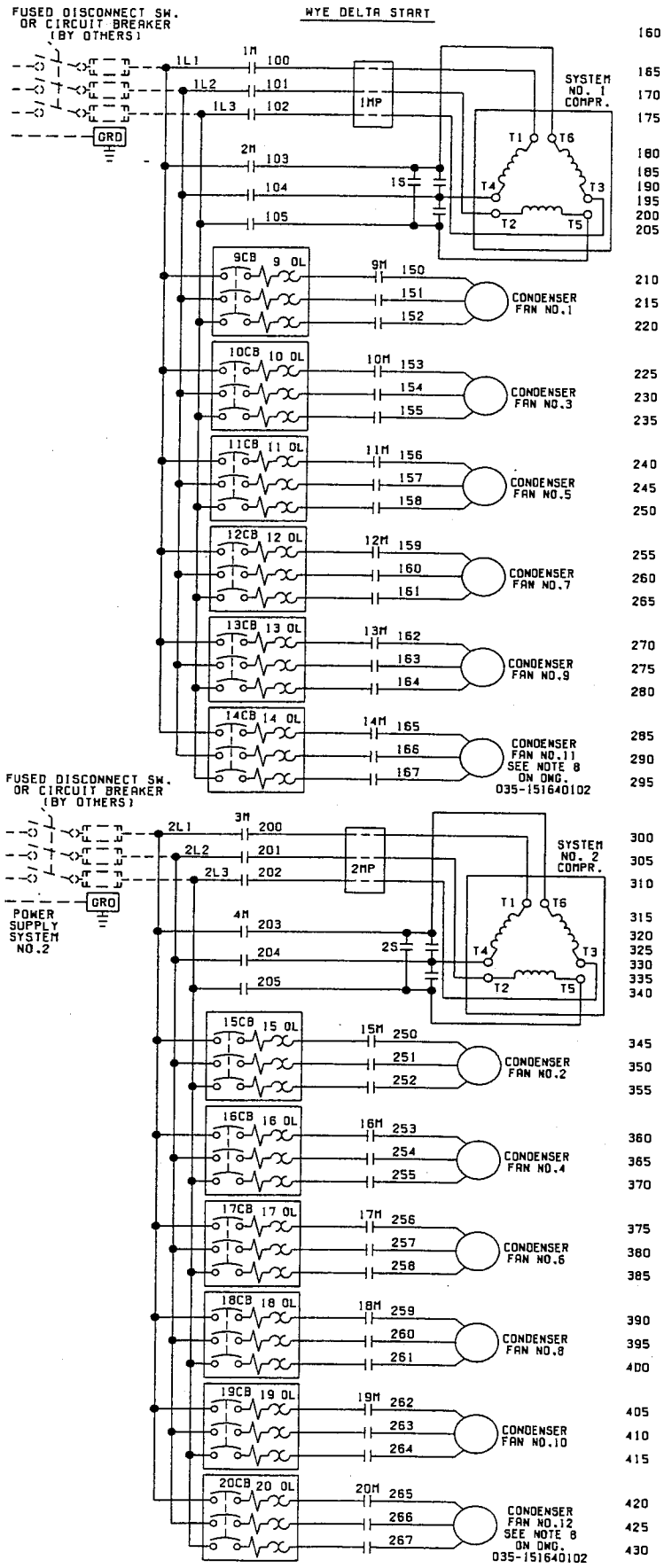

FIG. 15 – CONT'D

LD03229

ELEMENTARY DIAGRAM

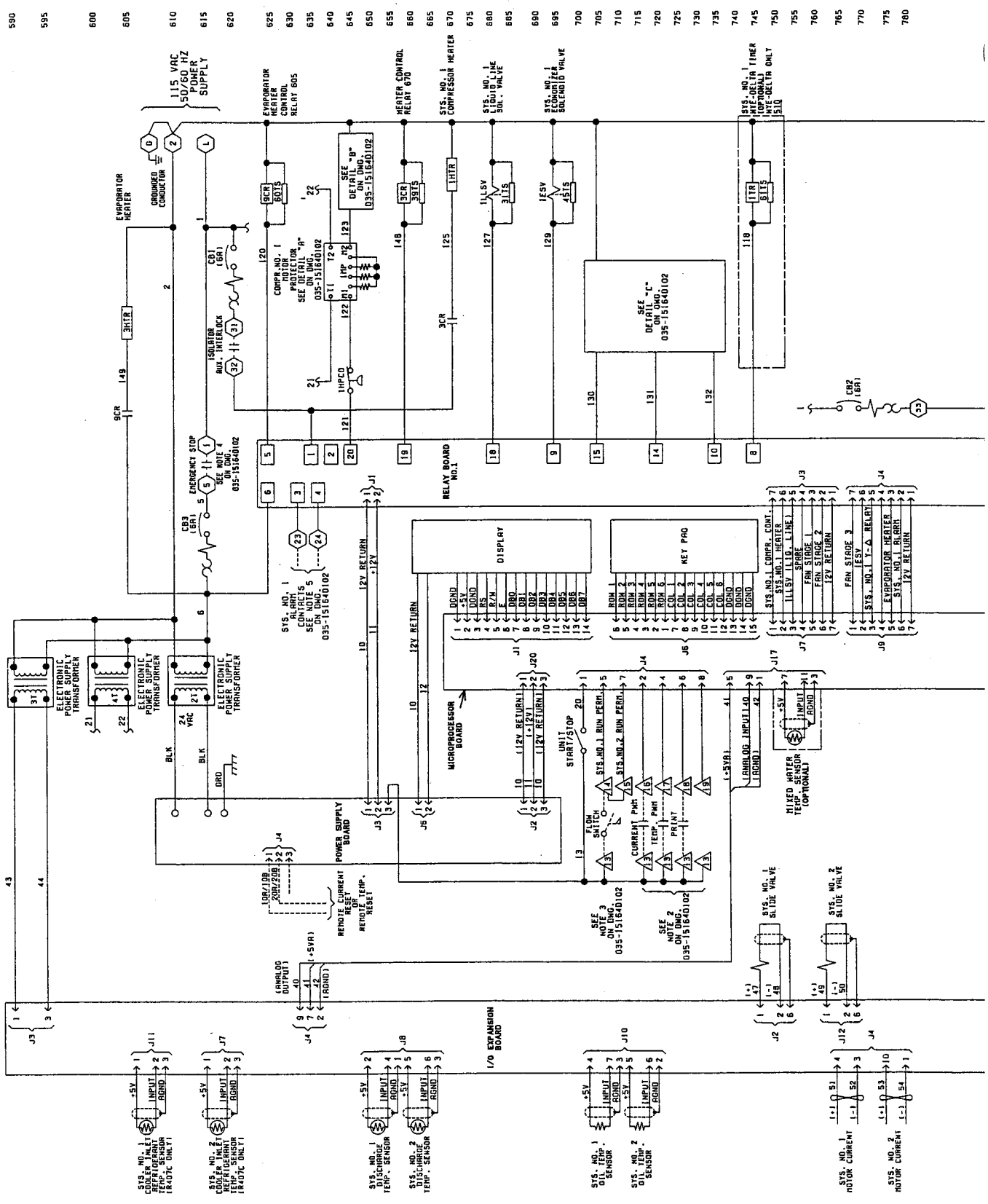

FIG. 15 – CONTINUED

ELEMENTARY DIAGRAM

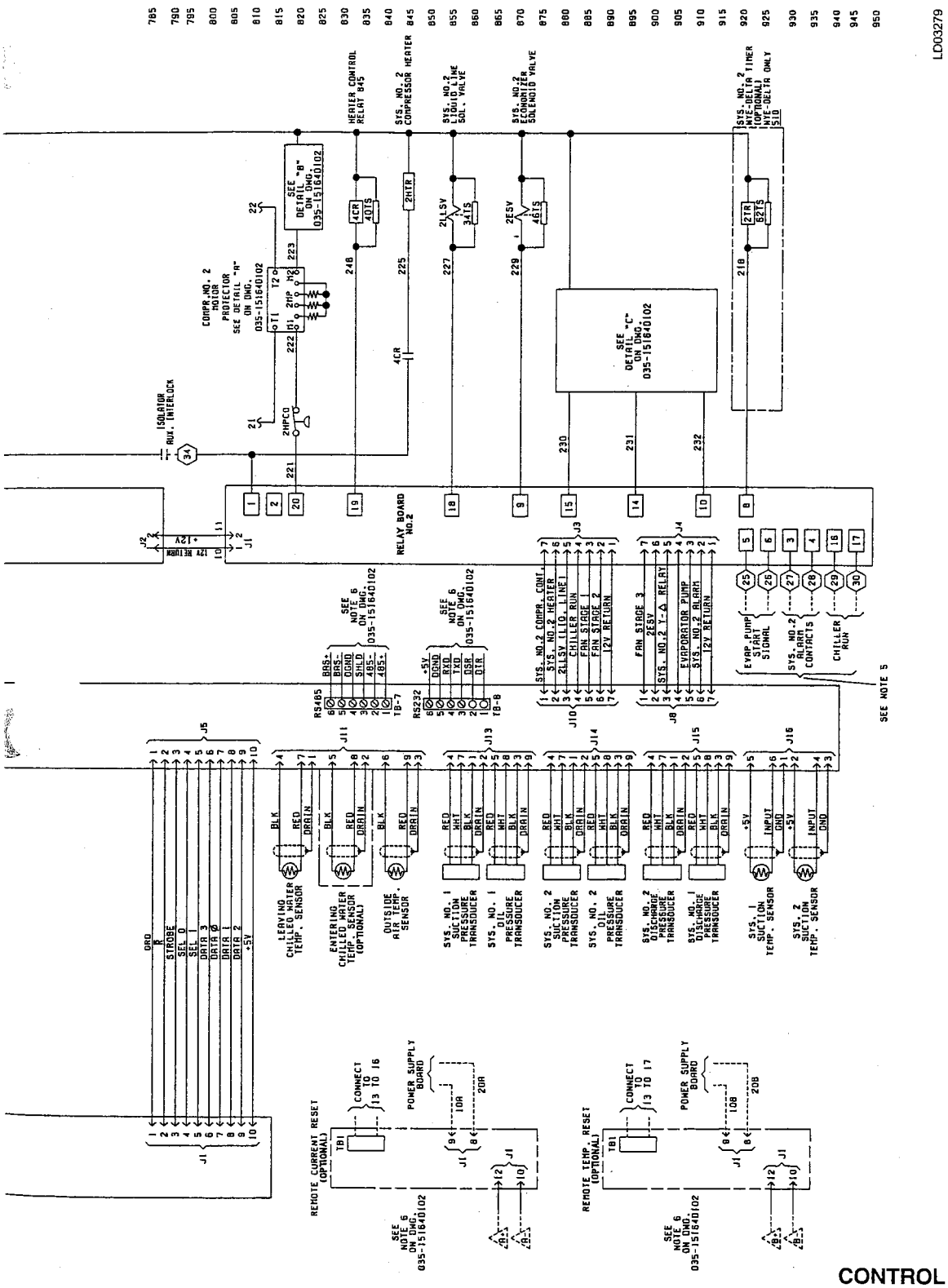

CAUTION:
No Controls (relays, etc.) should be mounted in the Smart Panel enclosure or connected to power supplies in the control panel. Additionally, control wiring not connected to the Smart Panel should not be run through the cabinet. This could result in nuisance faults.

CAUTION:
Any inductive devices (relays) wired in series with the flow switch for start/stop, into the Alarm circuitry, or pilot relays for pump starters wired through motor contactor auxiliary contacts must be suppressed with YORK P/N 031-00808-000 suppressor across the relay/contactor coil.

Any contacts connected to flow switch inputs or BAS inputs on terminals 13 - 19 or TB3, or any other terminals, must be suppressed with a YORK P/N 031-00808-000 suppressor across the relay/contactor coil.

CAUTION:
Control wiring connected to the control panel should never be run in the same conduit with power wiring.

CONTROL POWER SUPPLY

UNIT VOLTAGE		CONTROL POWER SUPPLY	MIN CIRCUIT AMP.	MAX DUAL ELEMENT FUSE SIZE	NON-FUSED DISC. SWITCH SIZE
ALL MODELS W/O TRANS.		115-1-50/60	20A	20A 250V	30A 240V
MODELS	-17	200-1-60	15A	15A 250V	30A 240V
WITH	-28	230-1-60	15A	15A 250V	30A 240V
TRANS.	-46	400-1-60	8A	8A 600V	30A 480V
*	-58	575-1-60	8A	8A 600V	30A 600V

* All primary and secondary wiring between transformer and control panel included.

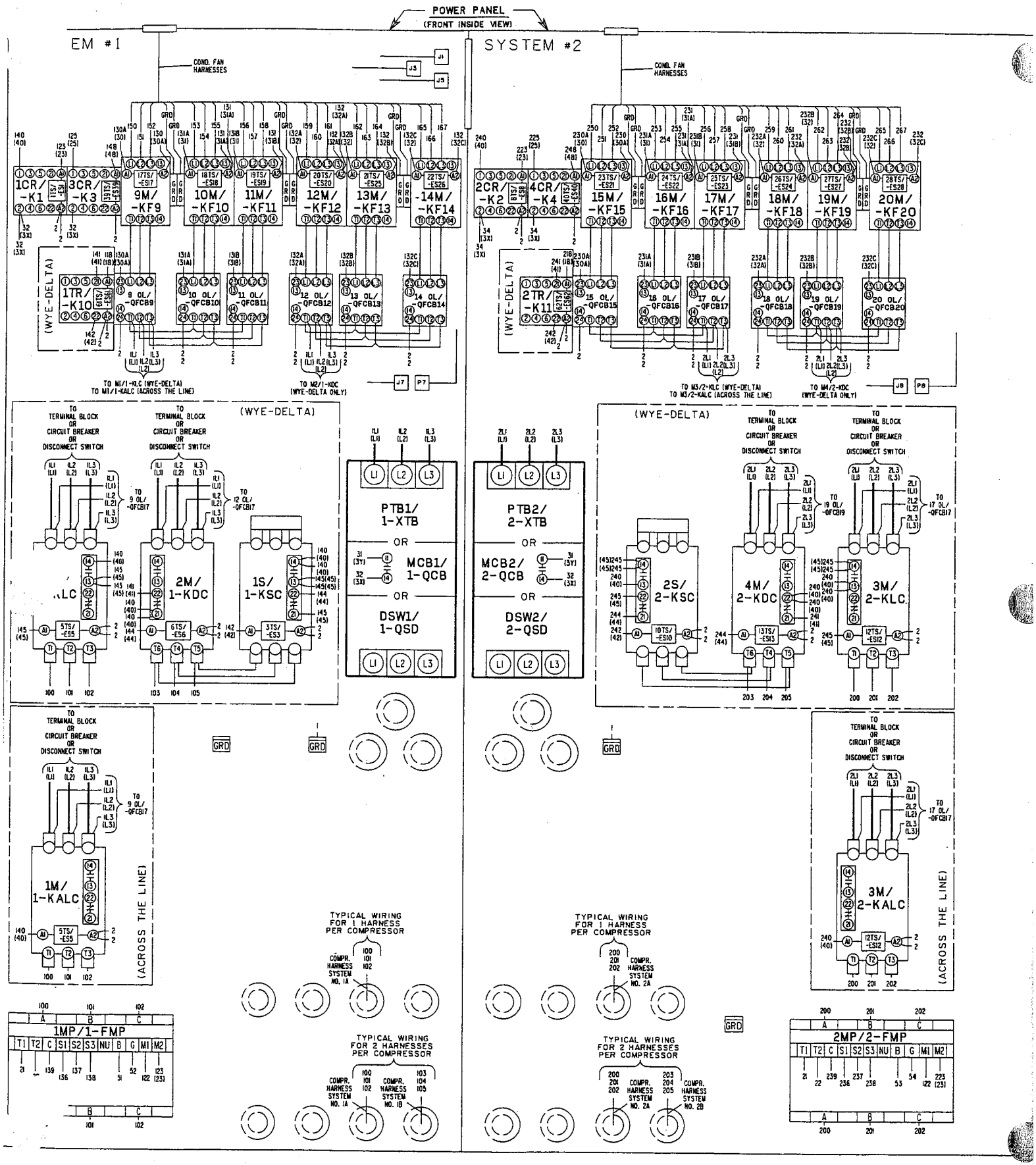

FIG. 16 – POWER PANEL (FRONT INSIDE VIEW) - WYE-DELTA START

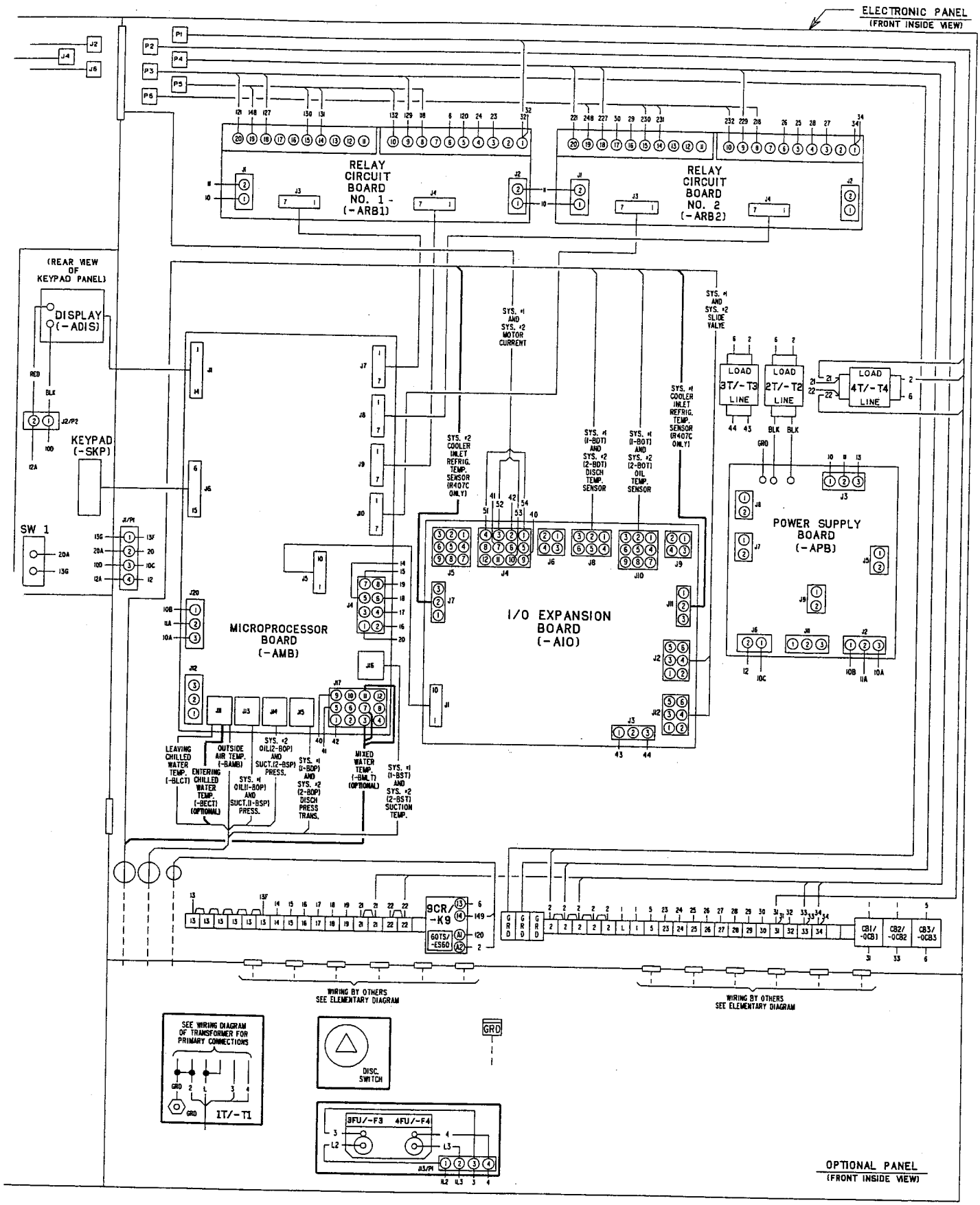

LD03280

FIG. 17 – ELECTRONIC PANEL (FRONT INSIDE VIEW) – WYE-DELTA START

FIG. 14 & 15 LEGEND (pages 56 & 57)

1CR THRU 4CR, 9CR/ THRU -K4, -K9	-CONTROL RELAYS
CB2, CB3/ 1,-QBC2,-QCB3	-CIRCUIT BREAKERS
5CB THRU 14CB	-OVERLOAD CIRCUIT BREAKERS (SYS. #1)
15CB THRU 20CB	-OVERLOAD CIRCUIT BREAKERS (SYS. #2)
9 OL THRU 14 OL	-MOTOR OVERLOADS (SYS. #1)
15 OL THRU 20 OL	-MOTOR OVERLOADS (SYS. #2)
-QFCB9 THRU -QFCB14	-MOTOR OVERLOADS W/OVERLOAD CIRCUIT BREAKERS (SYS. #1)
-QFCB15 THRU -QFCB20	-MOTOR OVERLOADS W/OVERLOAD CIRCUIT BREAKERS (SYS. #2)
3FU, 4FU/ -F3, -F4	-TRANSFORMER FUSE (OPTIONAL)
1M, 3M/ 1-KLC OR 1-KALC, 2-KLC OR 2-KALC	-COMPRESSOR CONTACTORS
2M, 4M/ 1-KDC, 2-KDC	-COMPRESSOR CONTACTORS
1S, 2S/ 1-KSC, 2-KSC	-COMPRESSOR CONTACTORS
9M THRU 14M/ -KF9 THRU -KF14	-CONDENSER FAN CONTACTORS (SYS. #1)
15M THRU 20M/ -KF15 THRU -KF20	-CONDENSER FAN CONTACTORS (SYS. #2)
1MP/1-FMP	-MOTOR PROTECTOR (SYS. #1)
2MP/2-FMP	-MOTOR PROTECTOR (SYS. #2)
1T/-T1	-CONTROL TRANSFORMER 2KVA (OPTIONAL)
2T, 3T, 4T/ -T2, -T3, -T4	-MICRO PANEL TRANSFORMERS
1TR, 2TR/ -K10, -K11	-TIMER RELAYS
TS/-ES	-TRANSIENT SUPPRESSORS
PTB1, PTB2/ 1-XTB, 2-XTB	-POWER TERMINAL BLOCK
MCB1, MCB2/ 1-QCB, 2-QCB	-MOTOR CIRCUIT BREAKER
DSW1, DSW2/ 1-QSD, 2-QSD	-DISCONNECT SERVICE SWITCH
————	-WIRING BY YORK
— — — —	-WIRING BY OTHERS
━━━━	-OPTIONAL WIRING AND/OR COMPONENTS

CONNECTION DIAGRAM ELECTRIC BOX DXST DIRECT DRIVE

CONNECTION DIAGRAM, ELEC. BOX DXST DIRECT DRIVE

J1, J2, J3, J4, J5, J6, J7, J8, P7 & P8 — POWER PANEL

P1, P2, P3, P4, P5, & P6 — ELECTRONIC (MICRO) PANEL

NOTE: WIRE NUMBERS IDENTIFIED IN (PARENTHESIS) INDICATE THE ACTUAL HARNESS CODE STAMPED ON THE WIRE.

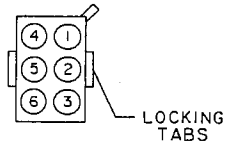

HOUSING - CONNECTOR (J1,J2,J5, & J6) WIRING END

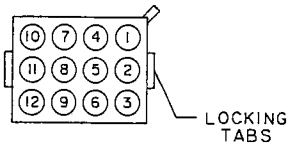

HOUSING - CONNECTOR (J3) WIRING END

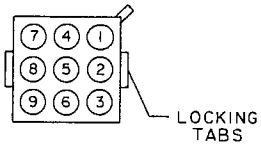

HOUSING - CONNECTOR (J7 & J8) WIRING END

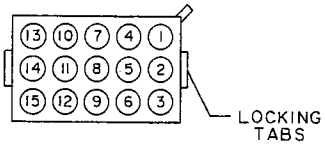

HOUSING - CONNECTOR (J4) WIRING END

PLUG NO.	WIRE NO.	PLUG PIN NO.
P1	21	1
	2	2
	22	3
	31	4
	32	5

PLUG NO.	WIRE NO.	PLUG PIN NO.
P2	21	1
	2	2
	22	3
	33	4
	34	5

PLUG NO.	WIRE NO.	PLUG PIN NO.
P3	2	1
	GRD	2
	129	5
	127	6
	121	11

PLUG NO.	WIRE NO.	PLUG PIN NO.
P4	2	1
	GRD	2
	227	4
	229	5
	221	11

PLUG NO.	WIRE NO.	PLUG PIN NO.
P5	130	1
	131	2
	132	3
	148	4
	118	6

PLUG NO.	WIRE NO.	PLUG PIN NO.
P6	230	1
	231	2
	232	3
	248	4
	218	6

PLUG NO.	WIRE NO.	PLUG PIN NO.
P7	125	1
	2	2
	123	3
	140	4
	141	5
	142	6
	32	7

PLUG NO.	WIRE NO.	PLUG PIN NO.
P8	225	1
	2	2
	223	3
	240	4
	241	5
	242	6
	34	7

PLUG NO.	WIRE NO.	PLUG PIN NO.
J1	21	1
	2	2
	22	3
	3Y	4
	3X	5

PLUG NO.	WIRE NO.	PLUG PIN NO.
J2	21	1
	2	2
	22	3
	3Y	4
	3X	5

PLUG NO.	WIRE NO.	PLUG PIN NO.
J3	2	1
	GRD	2
	125	4
	129	5
	127	6
	121	11
	122	12

PLUG NO.	WIRE NO.	PLUG PIN NO.
J4	2	1
	GRD	2
	225	3
	227	4
	229	5
	221	11
	122	12

PLUG NO.	WIRE NO.	PLUG PIN NO.
J5	30	1
	31	2
	32	3
	48	4
	18	6

PLUG NO.	WIRE NO.	PLUG PIN NO.
J6	30	1
	31	2
	32	3
	48	4
	18	6

PLUG NO.	WIRE NO.	PLUG PIN NO.
J7	25	1
	2	2
	23	3
	40	4
	41	5
	42	6
	3X	7

PLUG NO.	WIRE NO.	PLUG PIN NO.
J8	25	1
	2	2
	23	3
	40	4
	41	5
	42	6
	3X	7

FIG. 18 – CONNECTION DIAGRAM

LD03281

NOTES:

1. FIELD WIRING TO BE IN ACCORDANCE WITH THE CURRENT EDITION OF THE NATIONAL ELECTRICAL CODE AS WELL AS ALL OTHER APPLICABLE CODES AND SPECIFICATIONS.
2. CONTACTS MUST BE SUITABLE FOR SWITCHING 24VDC. (GOLD CONTACTS RECOMMENDED). WIRING SHALL NOT BE RUN IN THE SAME CONDUIT WITH ANY LINE VOLTAGE (CLASS I) WIRING.
3. TO CYCLE UNIT ON AND OFF AUTOMATICALLY WITH CONTACT SHOWN, INSTALL A CYCLING DEVICE IN SERIES WITH THE FLOW SWITCH. SEE NOTE 2 FOR CONTACT RATING AND WIRING SPECIFICATIONS.
4. TO STOP UNIT (EMERGENCY STOP) WITH CONTACTS OTHER THAN THOSE SHOWN, INSTALL THE STOP CONTACT BETWEEN TERMINALS 5 AND 1. IF A STOP DEVICE IS NOT INSTALLED, A JUMPER MUST BE CONNECTED BETWEEN TERMINALS 5 AND 1. DEVICE MUST HAVE A MINIMUM CONTACT RATING OF 6A AT 115VOLTS A.C.
5. CONTACTS ARE RATED AT 115V, 100VA, RESISTIVE LOAD ONLY, AND MUST BE SUPPRESSED AT LOAD BY USER.
6. SEE INSTALLATION, OPERATION AND MAINTENANCE MANUAL WHEN OPTIONAL EQUIPMENT IS USED.

LD03282

LEGEND

TS	TRANSIENT VOLTAGE SUPRESSION
⬡	TERMINAL BLOCK FOR CUSTOMER CONNECTIONS
△	TERMINAL BLOCK FOR CUSTOMER LOW VOLTAGE (CLASS 2) CONNECTIONS. SEE NOTE 2.
▭	TERMINAL BLOCK FOR YORK CONNECTIONS ONLY
———	WIRING AND COMPONENTS BY YORK
—— - - ——	OPTIONAL EQUIPMENT
— — — —	WIRING AND/OR COMPONENTS BY OTHERS

LD03283

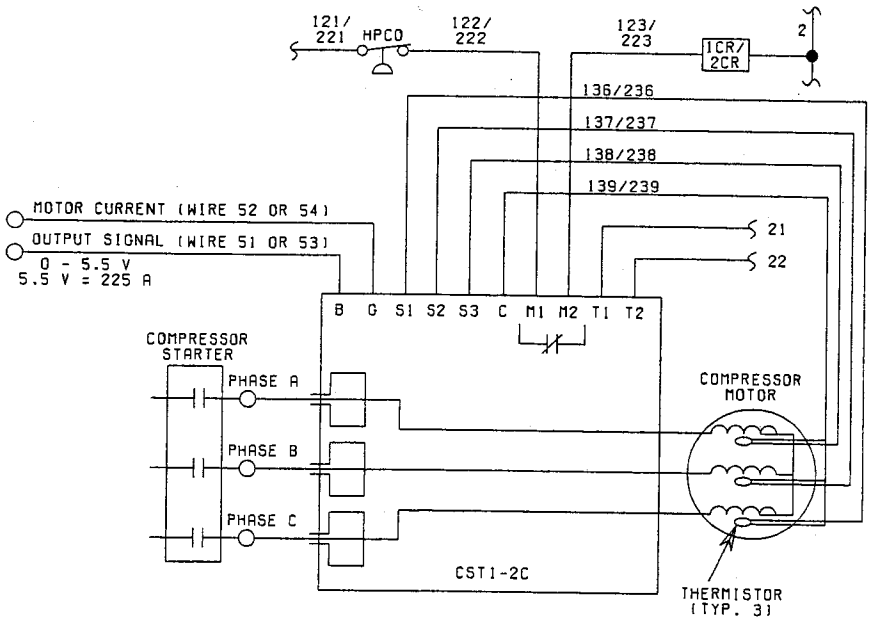

DETAIL "A"

LD03284

FIG. 19 – DETAIL "A" (see pages 50 - 55)

CONNECTION DIAGRAM (SYSTEM WIRING)

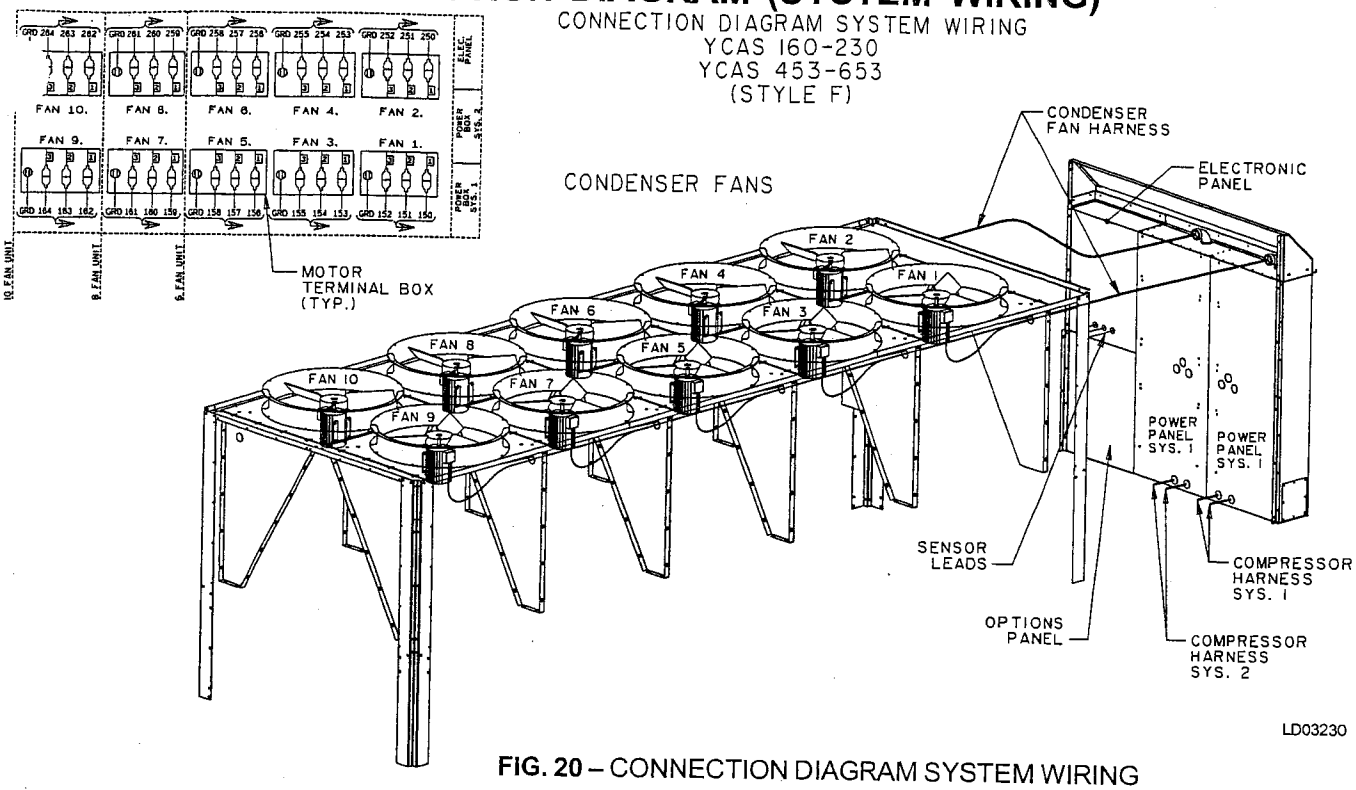

FIG. 20 – CONNECTION DIAGRAM SYSTEM WIRING

LEGEND

1CO	SYS. No.1 HIGH PRESS. CUTOUT
2CO	SYS. No.2 HIGH PRESS. CUTOUT
1 HTR	SYS. No.1 COMPR. CRANKCASE HEATER
2 HTR	SYS. No.2 COMPR. CRANKCASE HEATER
3 HTR	COOLER HEATER
1 LLSV	SYS. No.1 LIQUID LINE SOLENOID VALVE (UNIT IDENT)
2 LLSV	SYS. No.2 LIQUID LINE SOLENOID VALVE (UNIT IDENT)
1 ESV	ECONOMIZER SOLENOID VALVE (UNIT IDENT)
2 ESV	ECONOMIZER SOLENOID VALVE (UNIT IDENT)
TXV 1	SYS. No.1 THERMAL EXPANSION VALVE (UNIT IDENT)
TXV 2	SYS. No.2 THERMAL EXPANSION VALVE (UNIT IDENT)

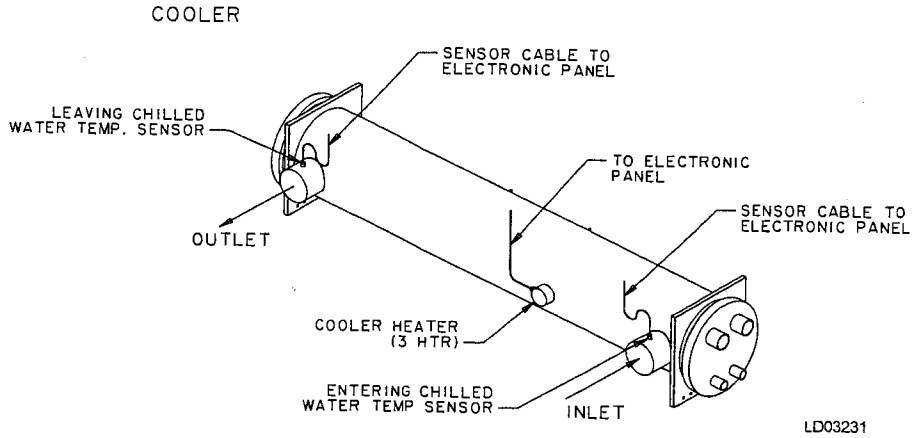

FIG. 21 – SENSOR CONNECTION

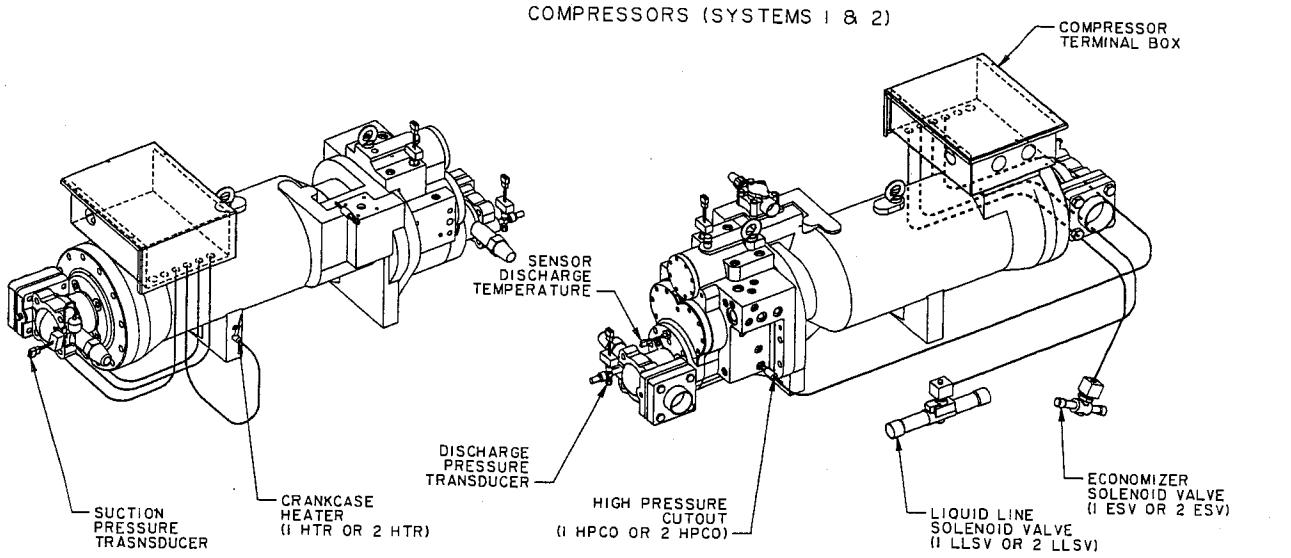

FIG. 22 – COMPRESSORS (SYSTEMS 1 & 2)

COMPRESSOR TERMINAL BOX

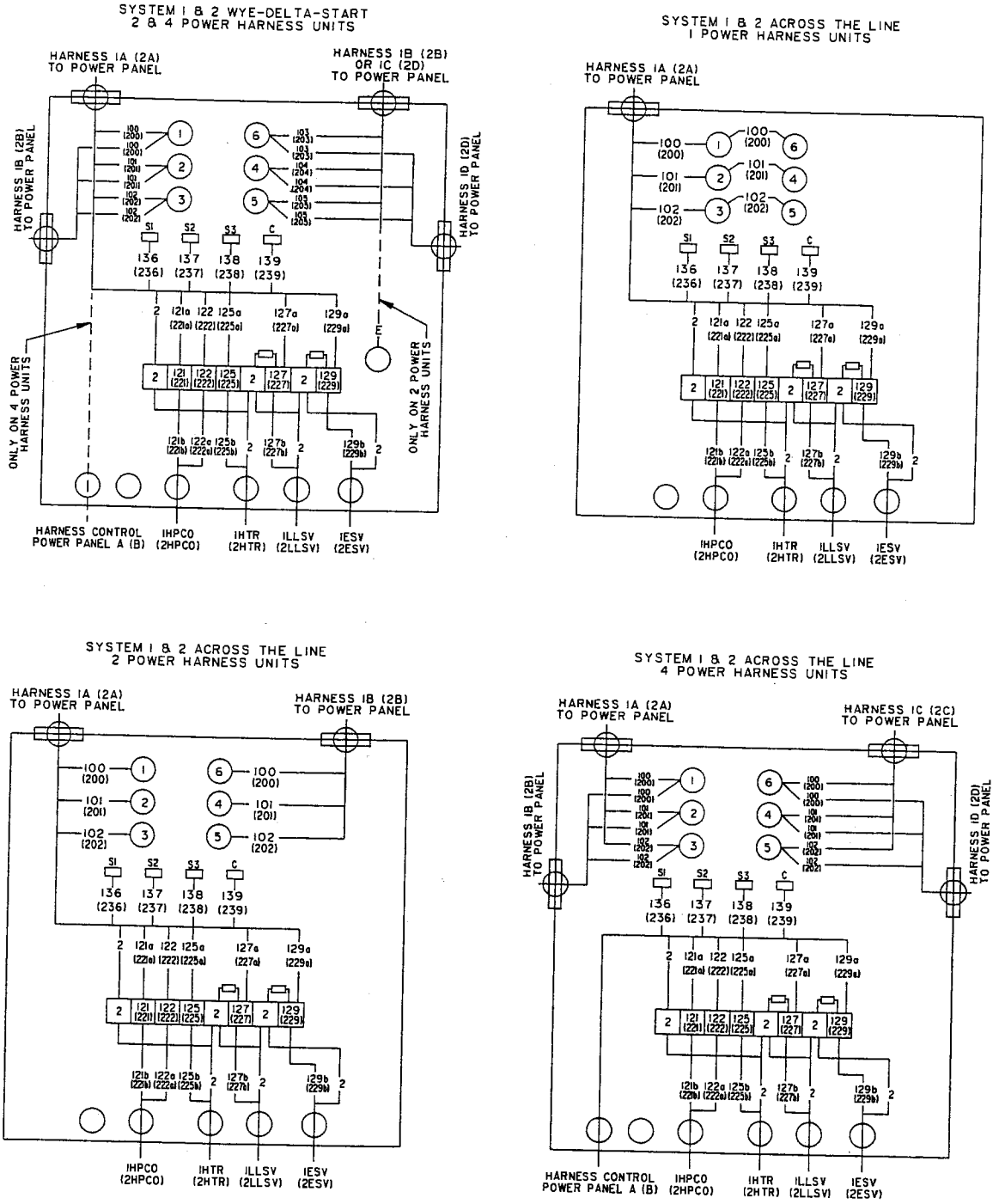

FIG. 23 – COMPRESSOR TERMINAL BOXES

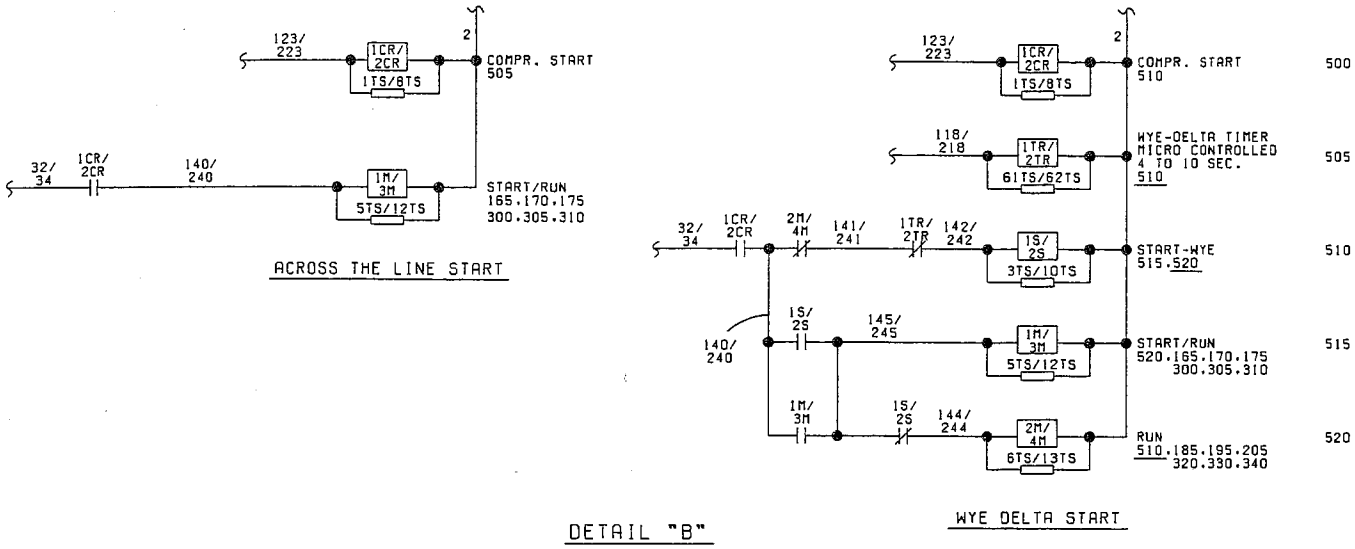

FIG. 24 – DETAIL "B"

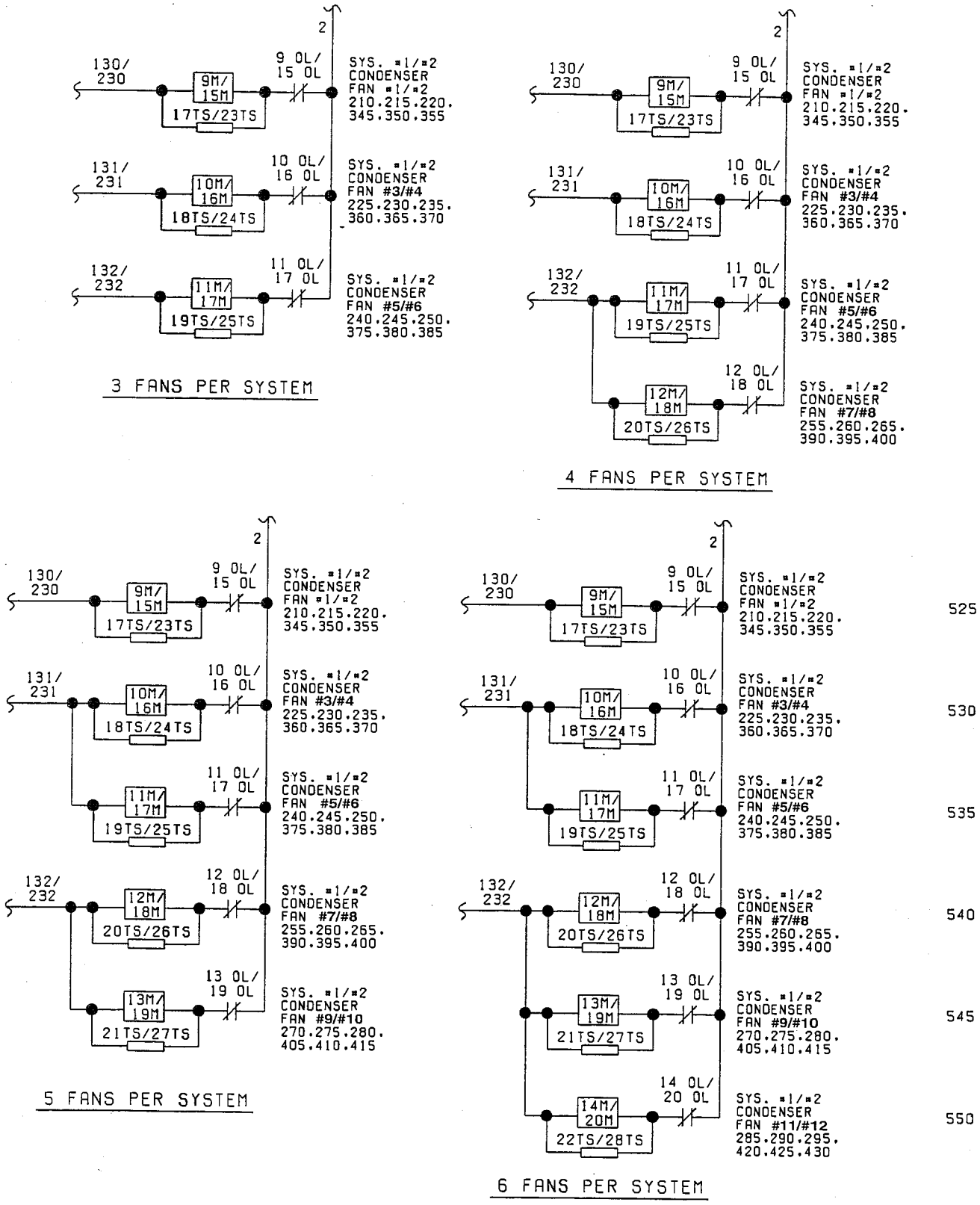

DETAIL "C"

SEE ENGINEERING GUIDE OR INSTALLATION, OPERATION AND MAINTENANCE MANUAL FOR NUMBER OF CONDENSER FANS FOR CHILLER MODEL.

FIG 25 – DETAIL "C"

DIMENSIONS – YCAS 130 - 180 (ENGLISH)

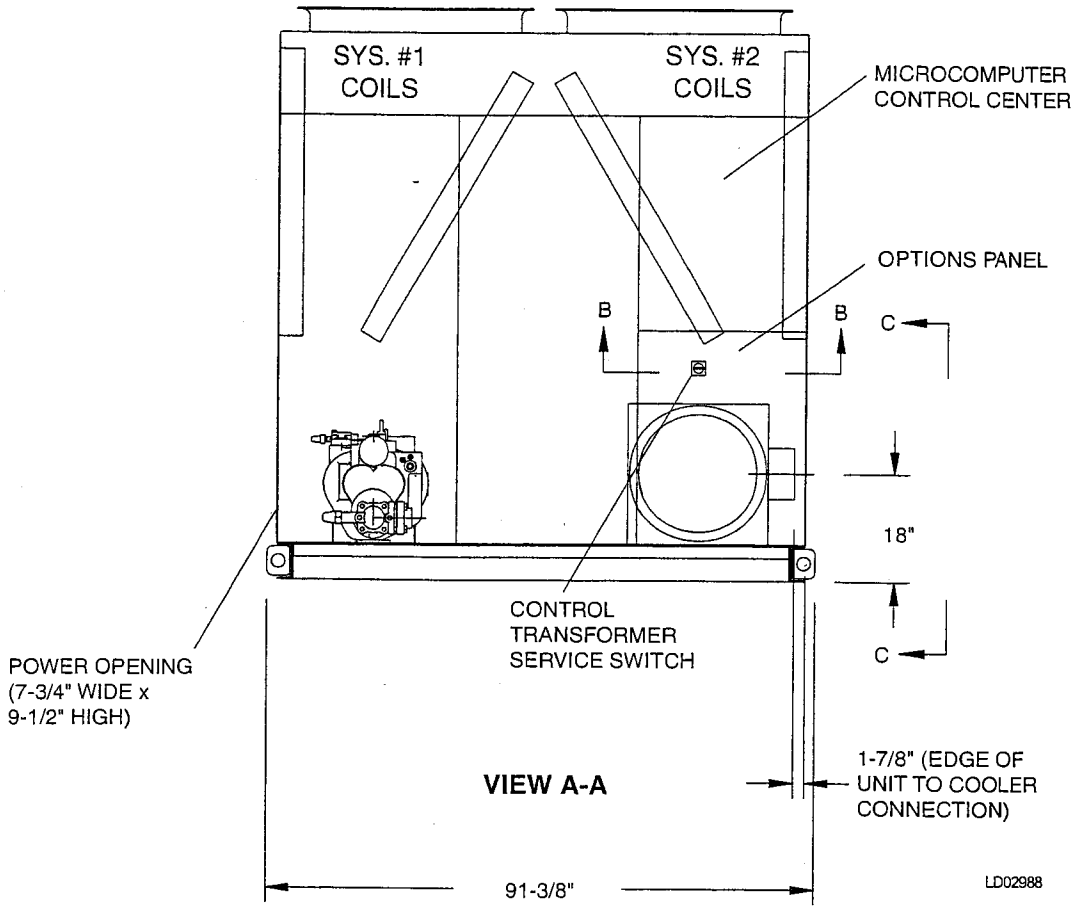

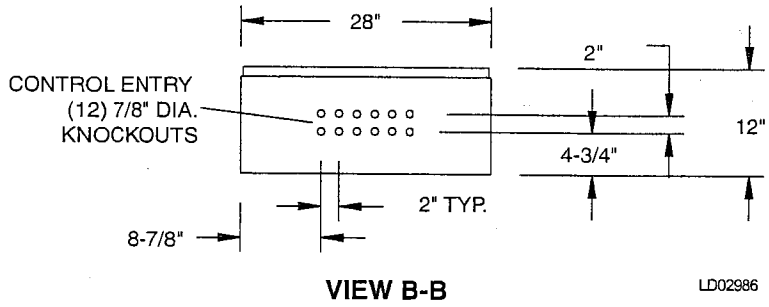

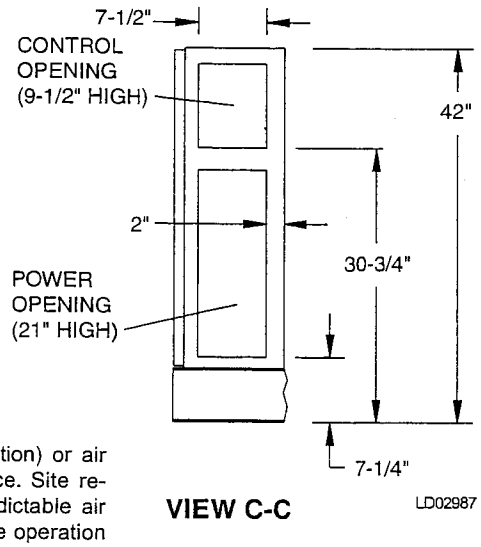

NOTES:

1. Placement on a level surface free of obstructions (including snow, for winter operation) or air recirculation ensures rated performance, reliable operation and ease of maintenance. Site restrictions may compromise minimum clearances indicated below, resulting in unpredictable air flow patterns and possible diminished performance. YORK's unit controls will optimize operation without nuisance high pressure safety cutout; however, the system designer must consider potential performance degradation. Access to the unit control center assumes the unit is no higher than on spring isolators. Recommended minimum clearances: Side to wall - 6'; rear to wall - 6'; control panel end to wall - 4'; top - no obstructions allowed; distance between adjacent units - 10'. No more than one adjacent wall may be higher than the unit.

FIG. 26 – MODEL YCAS 130 - 180 DIMENSIONS (ENGLISH DIMENSIONS)

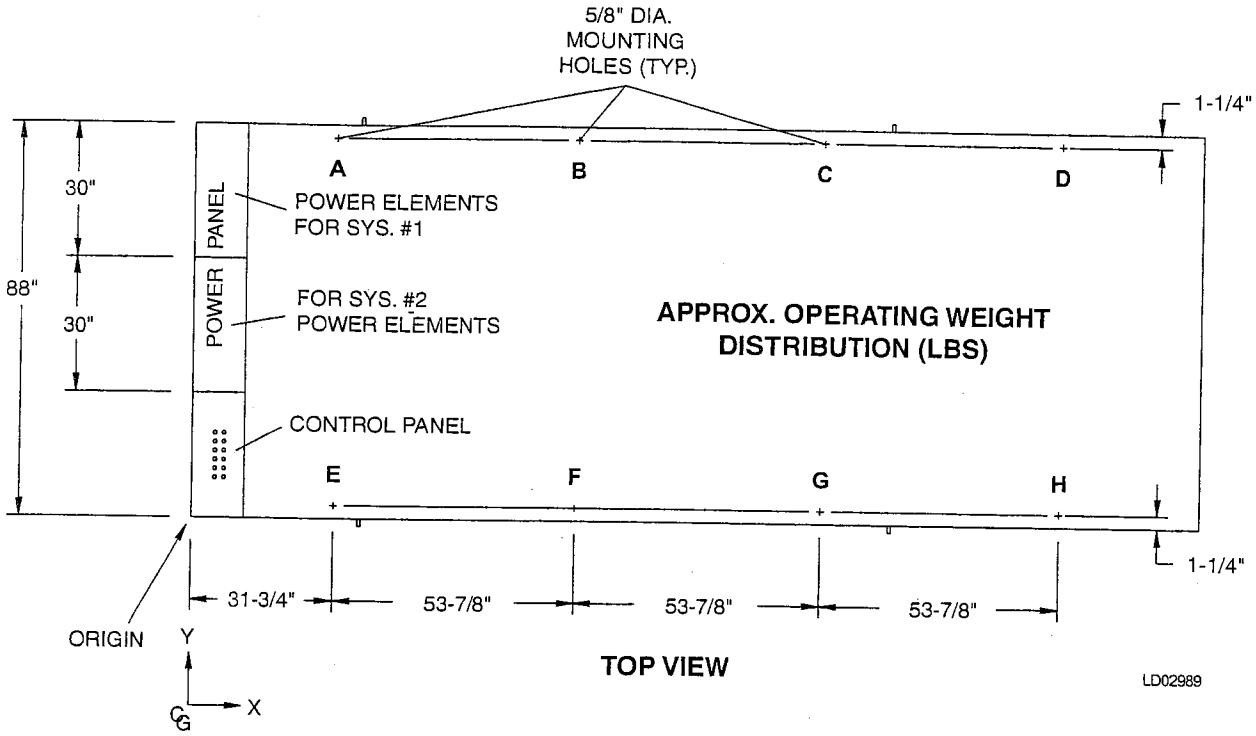

TOP VIEW

CENTER OF GRAVITY (Alum.)			
YCAS	X	Y	Z
130	101.3"	44.4"	37.8"
140	101.3"	44.4"	37.8"
150	106.7"	42.8"	36.2"
160	107.0"	43.0"	36.2"
170	107.0"	43.0"	36.2"
180	107.0"	43.0"	36.2"

CENTER OF GRAVITY (Copper)			
YCAS	X	Y	Z
130	103.5"	44.4"	40.7"
140	103.5"	44.4"	40.7"
150	108.2"	43.0"	39.2"
160	108.4"	43.1"	39.1"
170	108.4"	43.1"	39.1"
180	108.4"	43.1"	39.1"

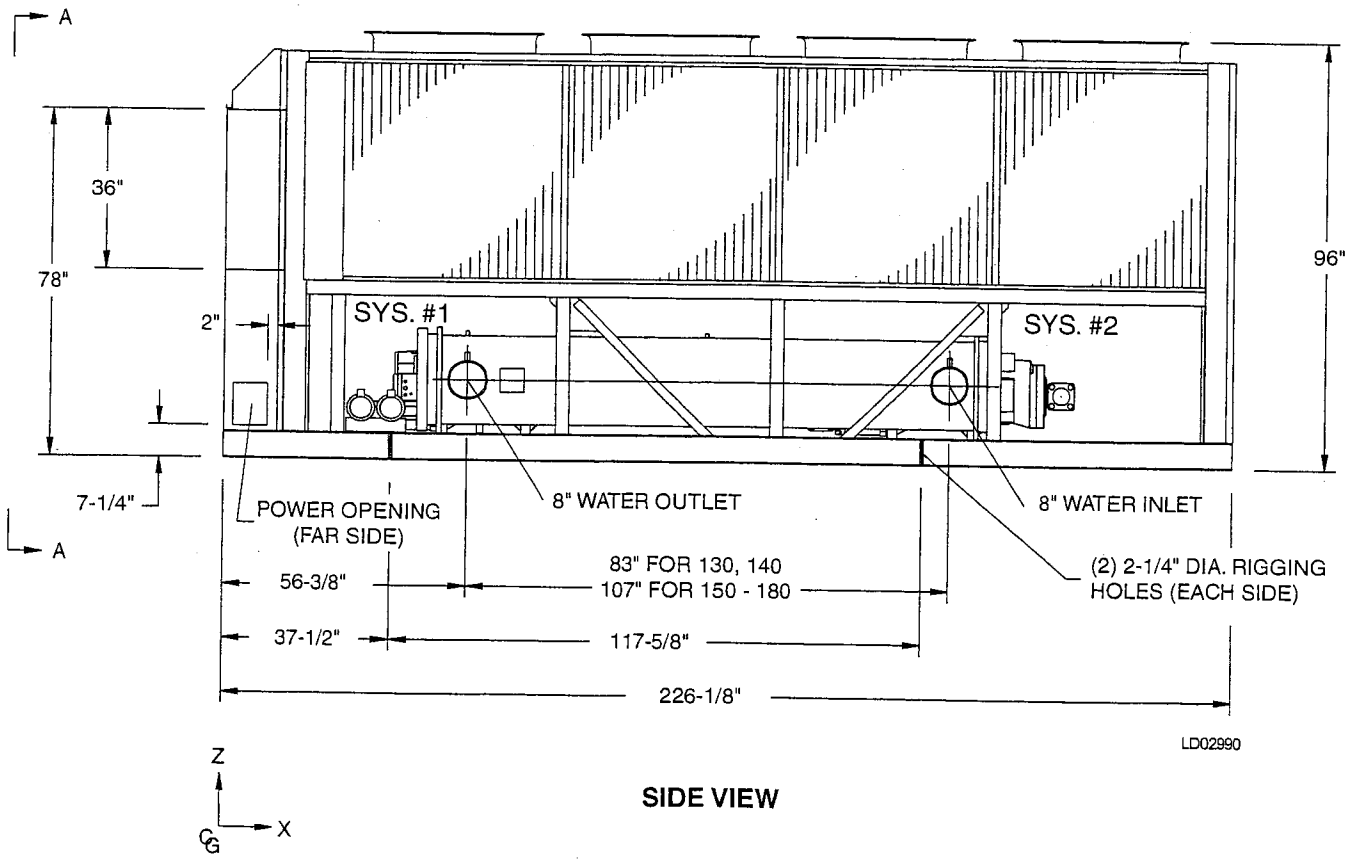

SIDE VIEW

DIMENSIONS - YCAS 130 - 180 (SI)

All dimensions are in mm unless otherwise noted.

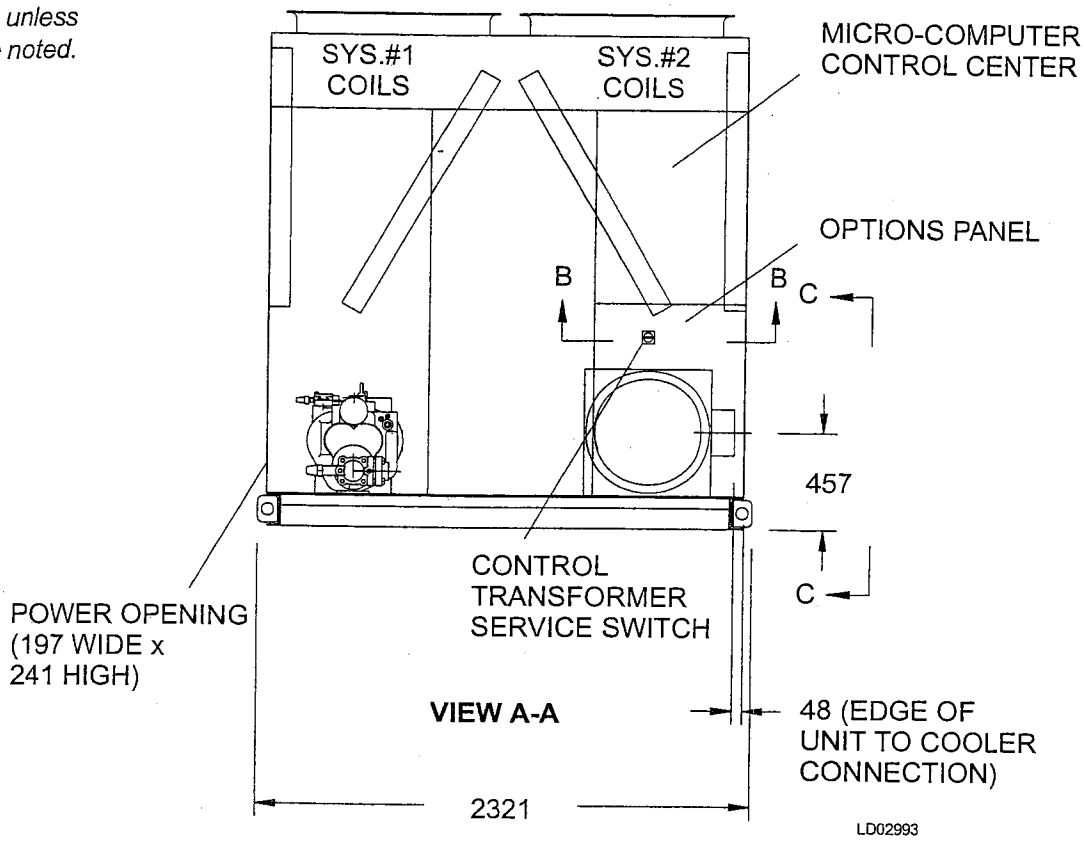

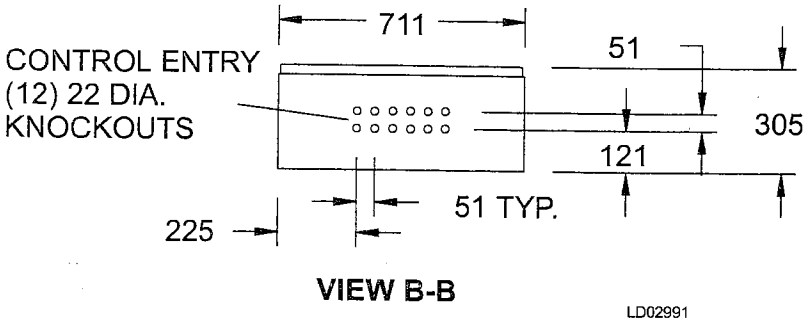

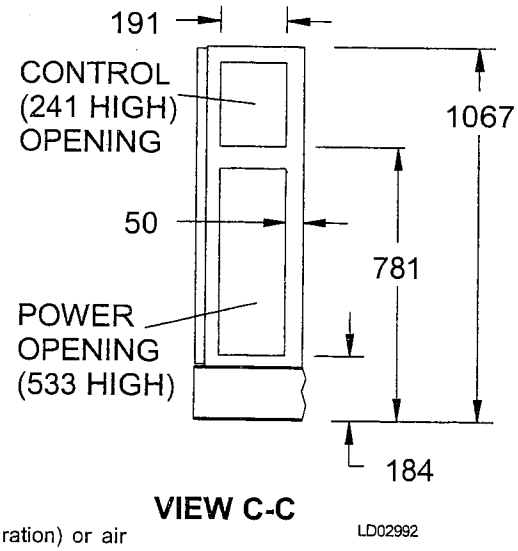

NOTES:

1. Placement on a level surface free of obstructions (including snow, for winter operation) or air recirculation ensures rated performance, reliable operation and ease of maintenance. Site restrictions may compromise minimum clearances indicated below, resulting in unpredictable air flow patterns and possible diminished performance. YORK's unit controls will optimize operation without nuisance high pressure safety cutout; however, the system designer must consider potential performance degradation. Access to the unit control center assumes the unit is no higher than on spring isolators. Recommended minimum clearances: Side to wall - 2m; rear to wall - 2m; control panel end to wall - 1.2m; top - no obstructions allowed; distance between adjacent units - 3m. No more than one adjacent wall may be higher than the unit.

FIG. 27 – MODEL 130 - 180 DIMENSIONS (SI)

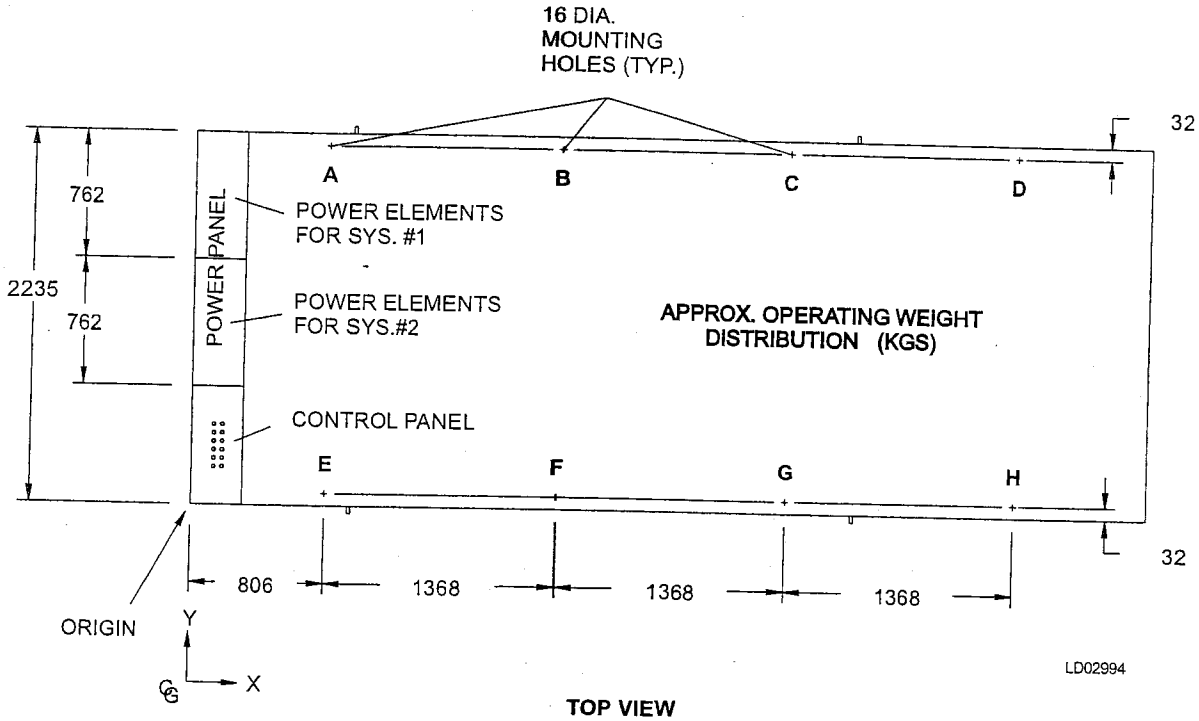

TOP VIEW

CENTER OF GRAVITY (Alum.)			
YCAS	X	Y	Z
130	2573.0	1127.8	960.1
140	2573.0	1127.8	960.1
150	2710.2	1087.1	919.5
160	2717.8	1092.2	919.5
170	2717.8	1092.2	919.5
180	2717.8	1092.2	919.5

CENTER OF GRAVITY (Copper)			
YCAS	X	Y	Z
130	2628.9	1127.8	1033.8
140	2628.9	1127.8	1033.8
150	2748.3	1092.2	995.7
160	2753.4	1094.7	993.1
170	2753.4	1094.7	993.1
180	2753.4	1094.7	993.1

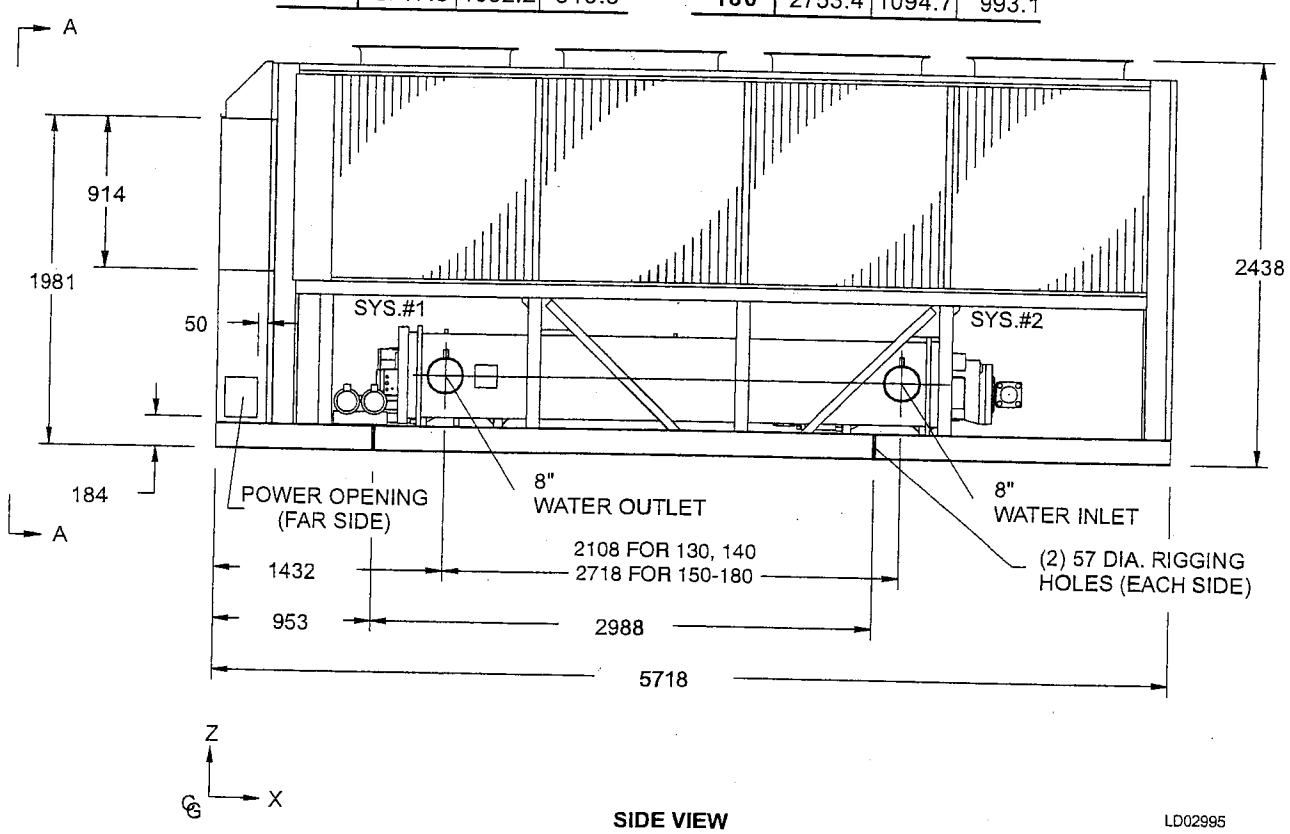

SIDE VIEW

DIMENSIONS - YCAS 200 - 230 (ENGLISH)

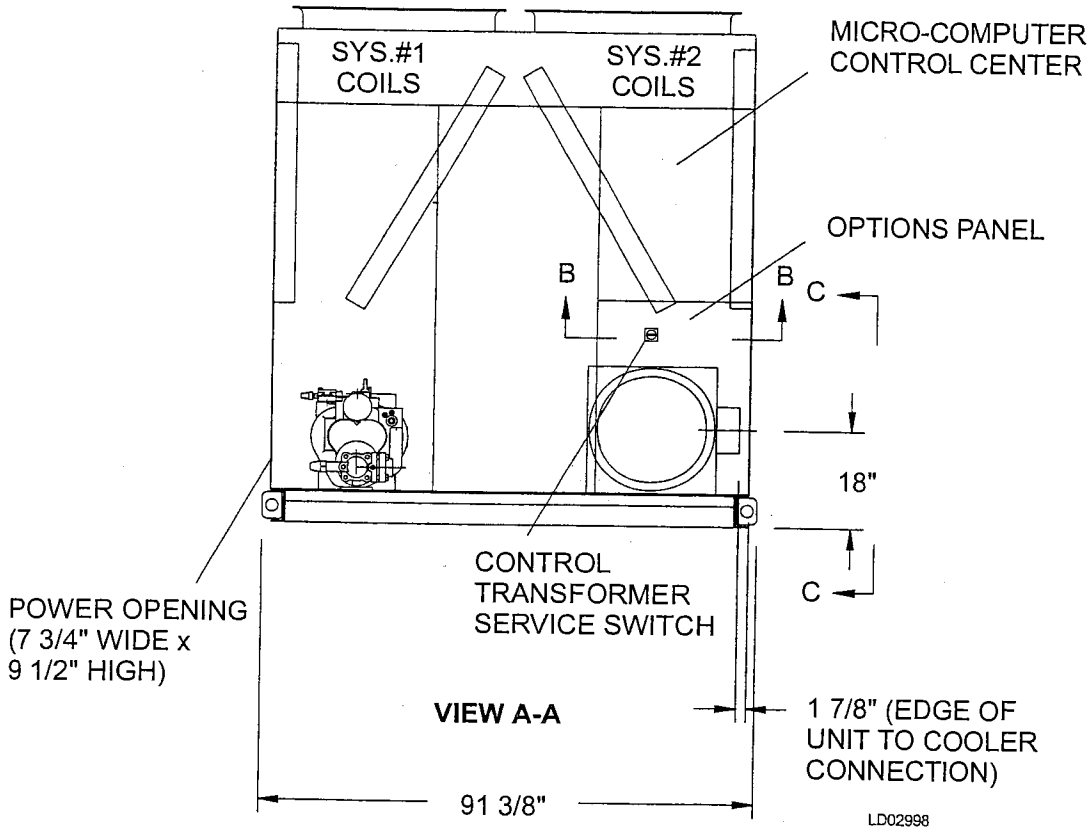

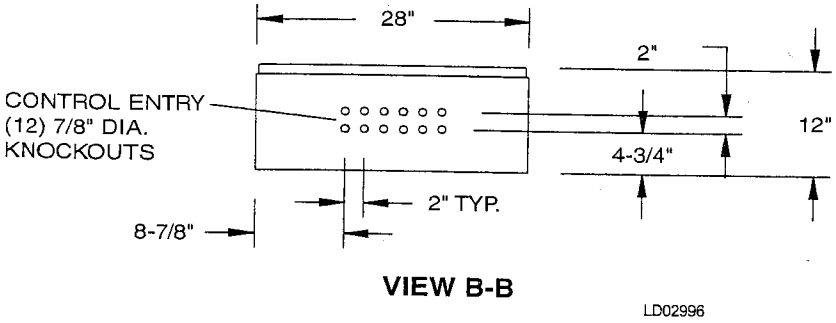

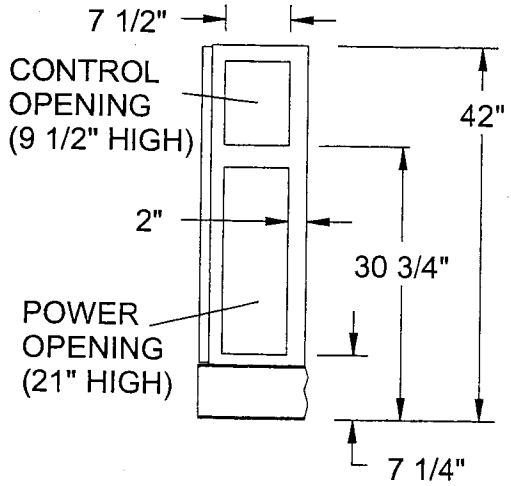

NOTES:

1. Placement on a level surface free of obstructions (including snow, for winter operation) or air recirculation ensures rated performance, reliable operation and ease of maintenance. Site restrictions may compromise minimum clearances indicated below, resulting in unpredictable air flow patterns and possible diminished performance. YORK's unit controls will optimize operation without nuisance high pressure safety cutout; however, the system designer must consider otential performance degradation. Access to the unit control center assumes the unit is no gher than on spring isolators. Recommended minimum clearances: Side to wall - 6'; rear to wall - 6'; control panel end to wall - 4'; top - no obstructions allowed; distance between adjacent units - 10'. No more than one adjacent wall may be higher than the unit.

FIG. 28 – MODEL 200 - 230 DIMENSIONS (SI)

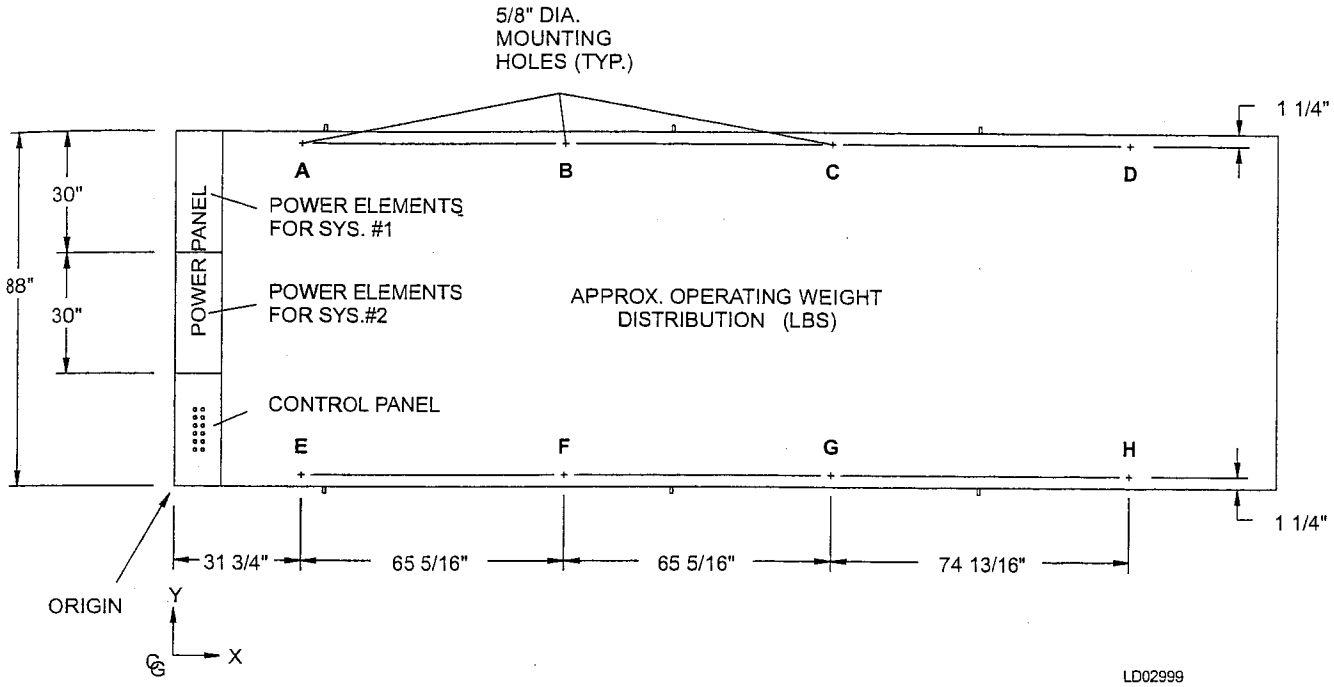

TOP VIEW

CENTER OF GRAVITY (Alum.)			
YCAS	**X**	**Y**	**Z**
200	119.4"	43.2"	38.0"
210	119.4"	43.2"	38.0"
230	119.4"	43.2"	38.0"

CENTER OF GRAVITY (Copper)			
YCAS	**X**	**Y**	**Z**
200	122.3"	43.3"	41.0"
210	122.3"	43.3"	41.0"
230	122.3"	43.3"	41.0"

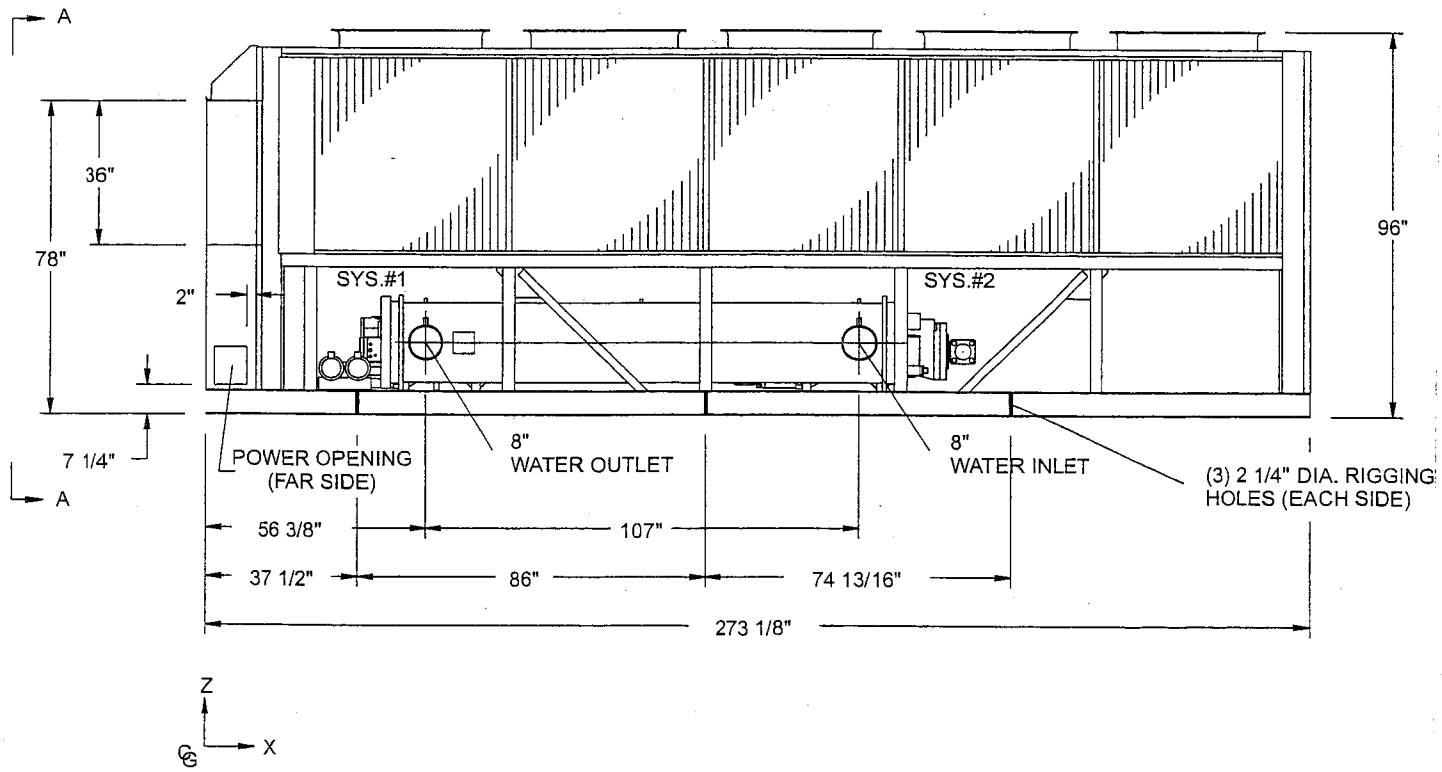

SIDE VIEW

DIMENSIONS - YCAS 200 - 230 (SI)

All dimensions are in mm unless otherwise noted.

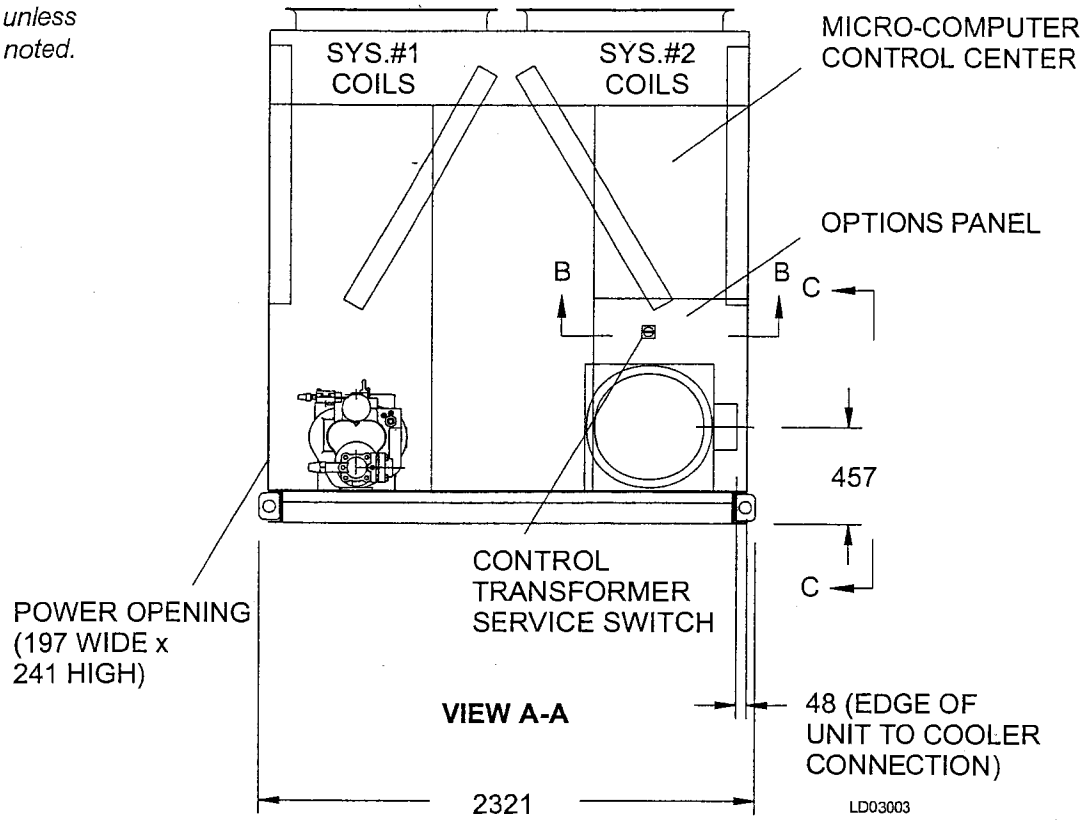

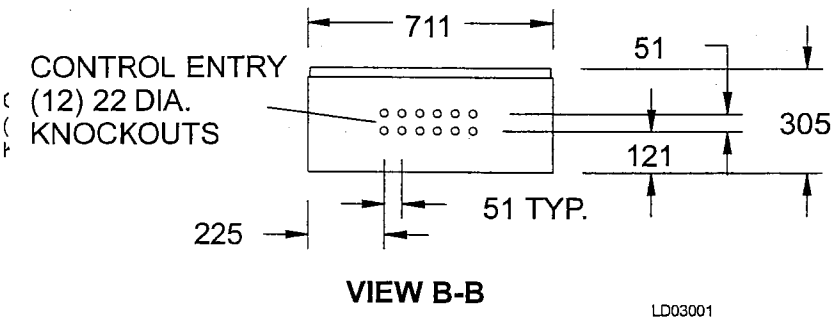

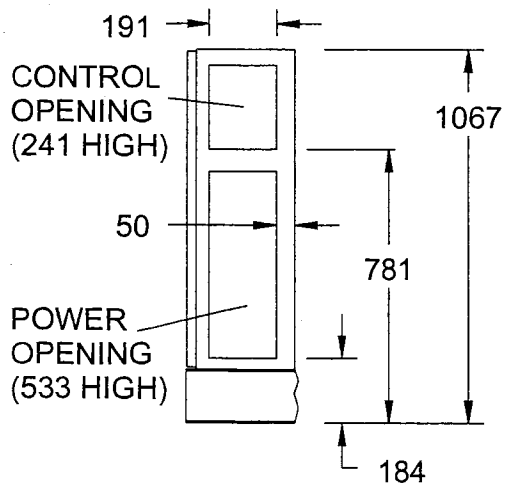

NOTES:

1. Placement on a level surface free of obstructions (including snow, for winter operation) or air recirculation ensures rated performance, reliable operation and ease of maintenance. Site restrictions may compromise minimum clearances indicated below, resulting in unpredictable air flow patterns and possible diminished performance. YORK's unit controls will optimize operation without nuisance high pressure safety cutout; however, the system designer must consider potential performance degradation. Access to the unit control center assumes the unit is no higher than on spring isolators. Recommended minimum clearances: Side to wall - 2m; rear to wall - 2m; control panel end to wall - 1.2m; top - no obstructions allowed; distance between adjacent units - 3m. No more than one adjacent wall may be higher than the unit.

FIG. 29 – MODEL 200 - 230 DIMENSIONS (SI)

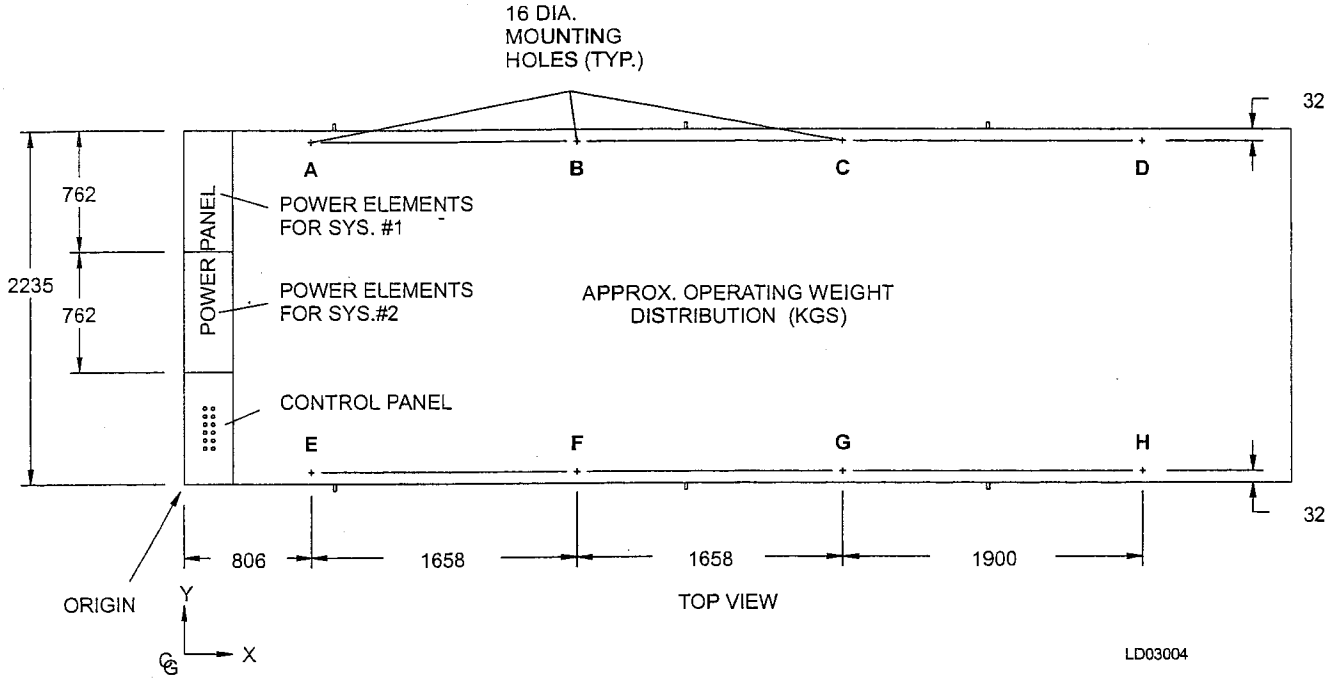

CENTER OF GRAVITY (Alum.)			
YCAS	X	Y	Z
200	3032.8	1097.3	965.2
210	3032.8	1097.3	965.2
230	3032.8	1097.3	965.2

CENTER OF GRAVITY (Copper)			
YCAS	X	Y	Z
200	3106.4	1099.8	1041.4
210	3106.4	1099.8	1041.4
230	3106.4	1099.8	1041.4

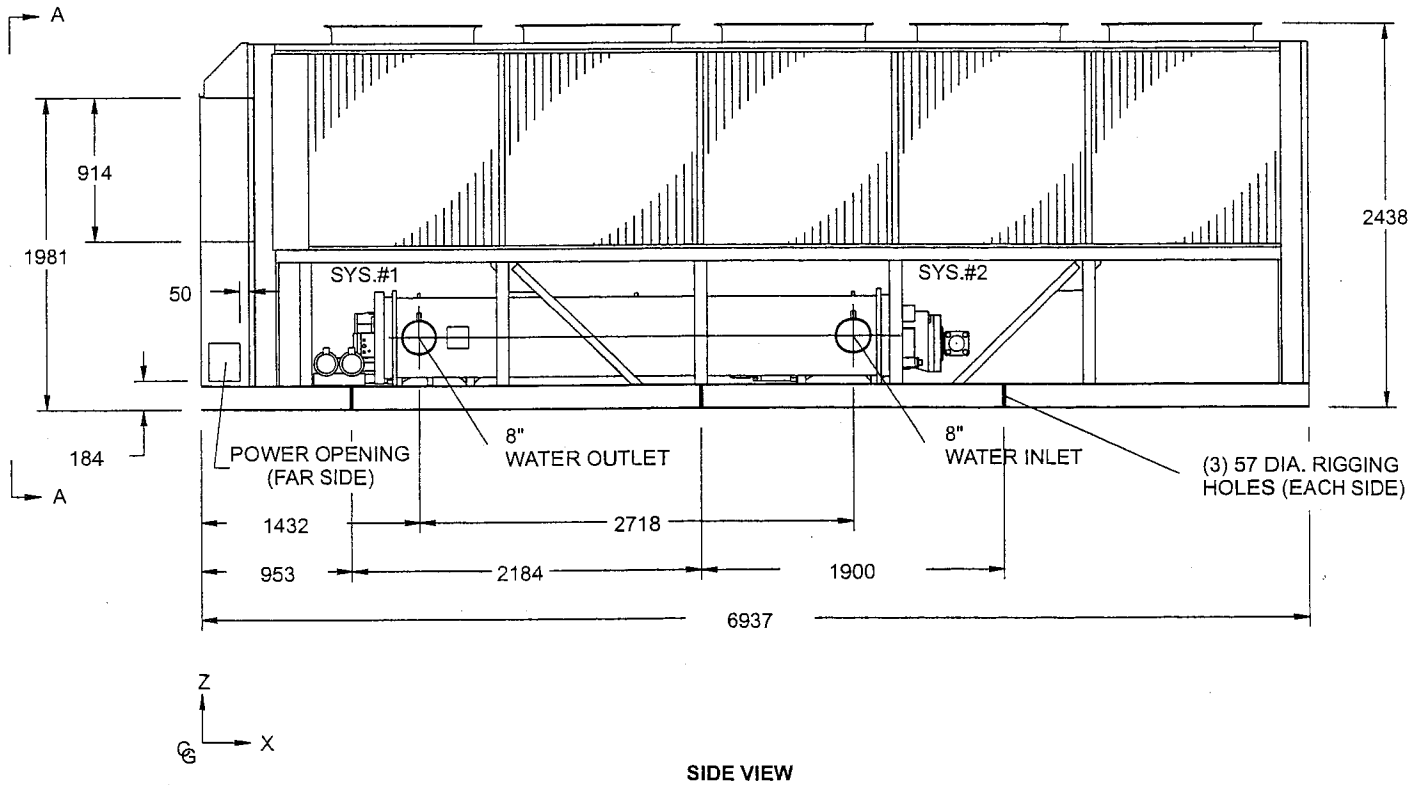

SIDE VIEW

LD03005

CLEARANCES

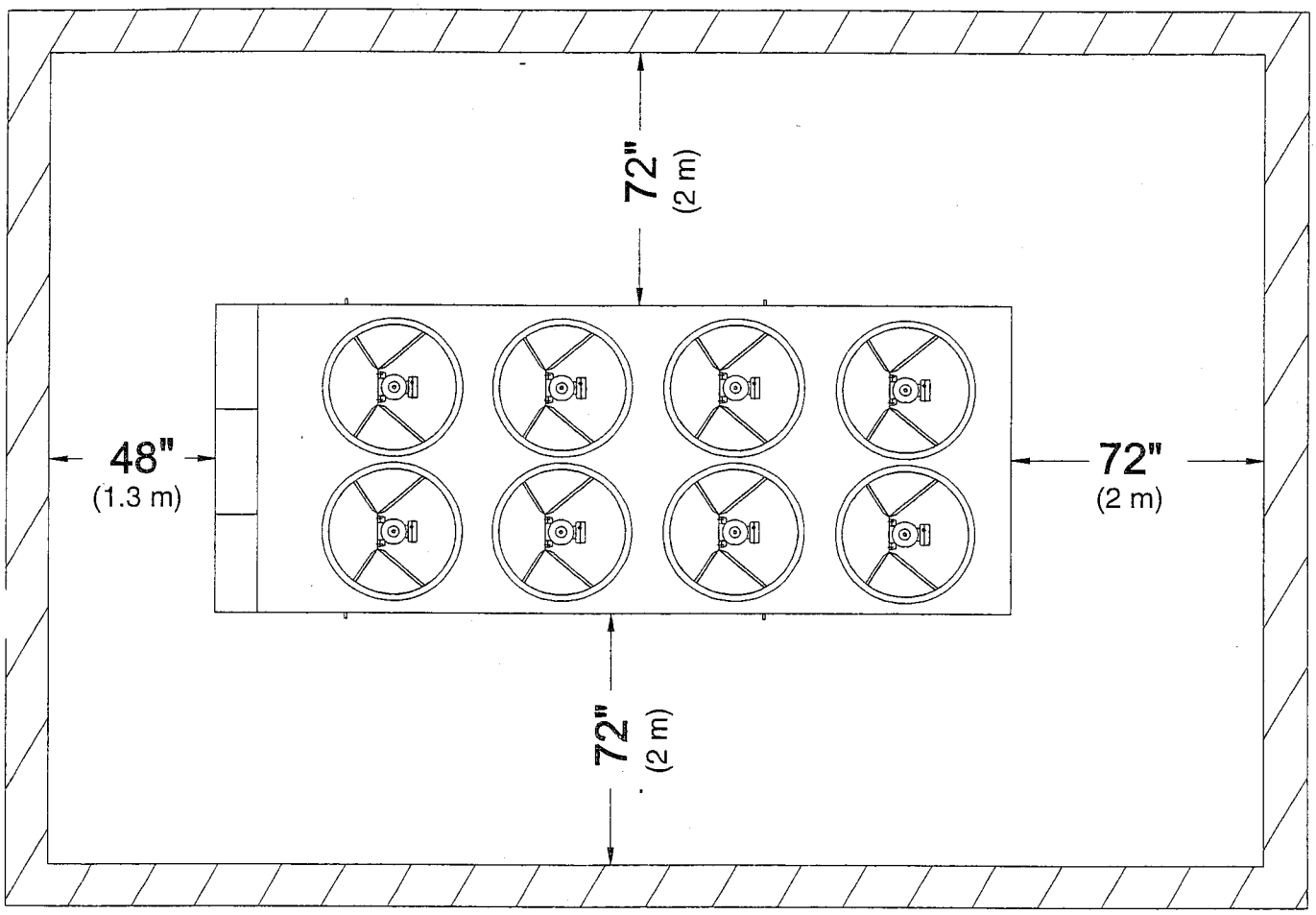

Notes: No obstructions allowed above the unit.
Only one adjacent wall may be higher than the unit.
Adjacent units should be 10 feet (3 meters) apart.

FIG. 30 – CLEARANCES

WEIGHT DISTRIBUTION AND ISOLATOR POSITIONS ISOLATOR MOUNT POSITIONS

Aluminium Fin Condenser Coils

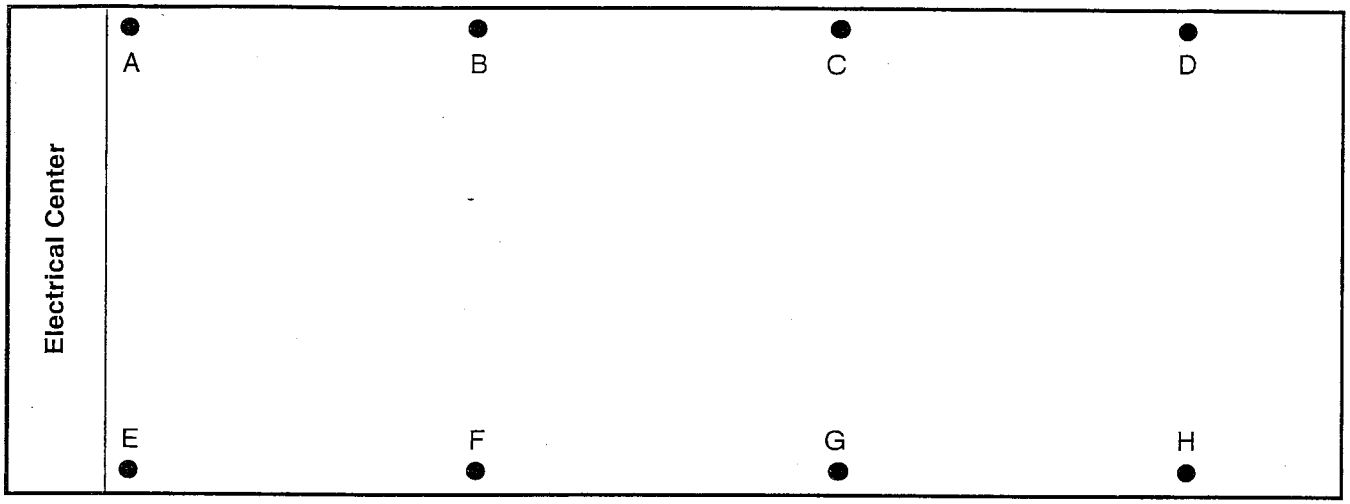

LD03527

60 Hertz Weight Distribution by Model in Pounds

60Hz		A	B	C	D	E	F	G	H	Total
YCAS	130	1,550	1,339	1,657	678	1,573	1,111	1,707	700	10,315
YCAS	140	1,576	1,356	1,692	688	1,614	1,136	1,764	711	10,537
YCAS	150	1,634	1,227	1,517	1,095	1,794	1,194	1,472	1,330	11,263
YCAS	160	1,637	1,210	1,538	1,109	1,796	1,163	1,460	1,334	11,247
YCAS	170	1,639	1,231	1,554	1,114	1,798	1,198	1,485	1,339	11,358
YCAS	180	1,662	1,227	1,561	1,132	1,836	1,188	1,494	1,369	11,469
YCAS	200	1,856	1,358	2,077	869	1,983	1,207	2,261	902	12,513
YCAS	210	1,859	1,387	2,089	874	1,986	1,254	2,278	907	12,634
YCAS	230	1,862	1,415	2,098	878	1,989	1,303	2,289	911	12,745

60 Hertz, 2" Defl. Isolator Selection - VMC Type AWMR-X-XXX

60Hz		A	B	C	D	E	F	G	H
YCAS	130	-1-552	-1-551	-1-552	-1-53	-1-552	-1-532	-1-553	-1-53
YCAS	140	-1-552	-1-551	-1-552	-1-53	-1-552	-1-532	-1-553	-1-53
YCAS	150	-1-552	-1-551	-1-552	-1-532	-1-553	-1-532	-1-552	-1-532
YCAS	160	-1-552	-1-551	-1-552	-1-532	-1-553	-1-532	-1-552	-1-532
YCAS	170	-1-552	-1-551	-1-552	-1-532	-1-553	-1-532	-1-552	-1-532
YCAS	180	-1-552	-1-551	-1-552	-1-532	-1-553	-1-532	-1-552	-1-532
YCAS	200	-1-553	-1-551	-2-531	-1-530	-1-553	-1-532	-2-531	-1-530
YCAS	210	-1-553	-1-551	-2-531	-1-530	-1-553	-1-532	-2-531	-1-530
YCAS	230	-1-553	-1-551	-2-531	-1-530	-1-553	-1-532	-2-531	-1-530

60 Hertz, 1" Defl. Isolator Selection - VMC Type CP-2-XX

60Hz		A	B	C	D	E	F	G	H
YCAS	130	31	28	31	26	31	27	31	26
YCAS	140	31	28	31	26	31	27	31	26
YCAS	150	31	28	31	27	31	27	31	28
YCAS	160	31	28	31	27	31	27	31	28
YCAS	170	31	28	31	27	31	27	31	28
YCAS	180	31	28	31	27	31	27	31	28
YCAS	200	31	28	32	26	32	28	35	26
YCAS	210	31	28	32	26	32	28	35	26
YCAS	230	31	28	32	26	32	28	35	26

WEIGHT DISTRIBUTION AND ISOLATOR POSITIONS ISOLATOR MOUNT POSITIONS

Black Fin Condenser Coils

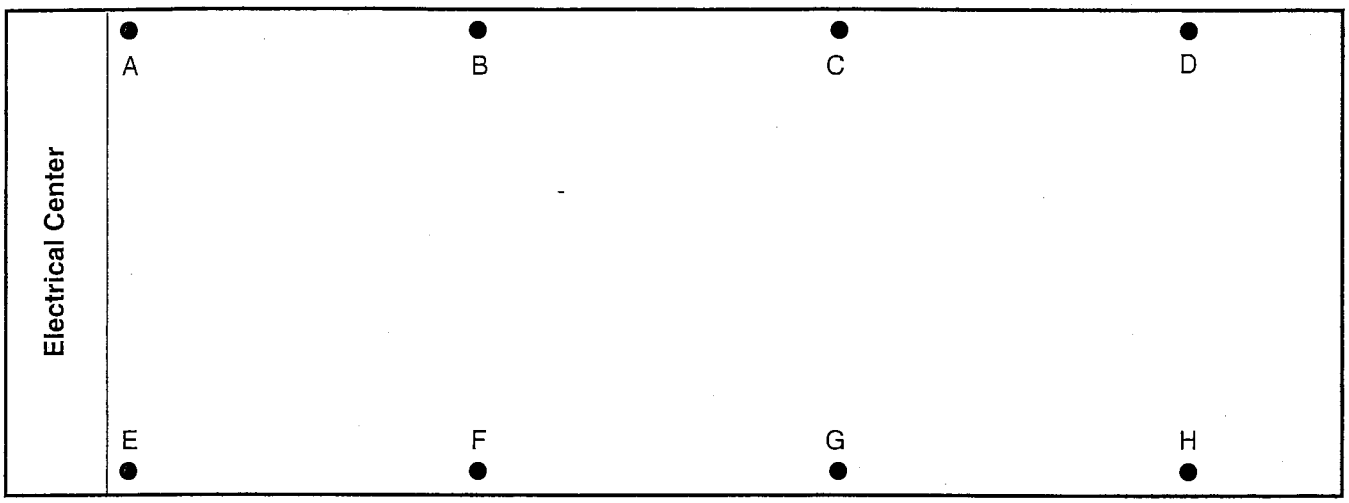

LD03527

60 Hertz Weight Distribution by Model in Pounds

60Hz		A	B	C	D	E	F	G	H	Total
YCAS	130	1,550	1,339	1,657	678	1,573	1,111	1,707	700	10,315
YCAS	140	1,576	1,356	1,692	688	1,614	1,136	1,764	711	10,537
YCAS	150	1,634	1,227	1,517	1,095	1,794	1,194	1,472	1,330	11,263
YCAS	160	1,637	1,210	1,538	1,109	1,796	1,163	1,460	1,334	11,247
YCAS	170	1,639	1,231	1,554	1,114	1,798	1,198	1,485	1,339	11,358
YCAS	180	1,662	1,227	1,561	1,132	1,836	1,188	1,494	1,369	11,469
YCAS	200	1,856	1,358	2,077	869	1,983	1,207	2,261	902	12,513
YCAS	210	1,859	1,387	2,089	874	1,986	1,254	2,278	907	12,634
YCAS	230	1,862	1,415	2,098	878	1,989	1,303	2,289	911	12,745

60 Hertz, 2" Defl. Isolator Selection - VMC Type AWMR-X-XXXH

60Hz		A	B	C	D	E	F	G	H
YCAS	130	-1-552	-1-551	-1-552	-1-53	-1-552	-1-532	-1-553	-1-53
YCAS	140	-1-552	-1-551	-1-552	-1-53	-1-552	-1-532	-1-553	-1-53
YCAS	150	-1-552	-1-551	-1-552	-1-532	-1-553	-1-532	-1-552	-1-532
YCAS	160	-1-552	-1-551	-1-552	-1-532	-1-553	-1-532	-1-552	-1-532
YCAS	170	-1-552	-1-551	-1-552	-1-532	-1-553	-1-532	-1-552	-1-532
YCAS	180	-1-552	-1-551	-1-552	-1-532	-1-553	-1-532	-1-552	-1-532
YCAS	200	-1-553	-1-551	-2-531	-1-530	-1-553	-1-532	-2-531	-1-530
YCAS	210	-1-553	-1-551	-2-531	-1-530	-1-553	-1-532	-2-531	-1-530
YCAS	230	-1-553	-1-551	-2-531	-1-530	-1-553	-1-532	-2-531	-1-530

60 Hertz, 1" Defl. Isolator Selection - VMC Type CP-2-XX

60Hz		A	B	C	D	E	F	G	H
YCAS	130	31	28	31	26	31	27	31	26
YCAS	140	31	28	31	26	31	27	31	26
YCAS	150	31	28	31	27	31	27	31	28
YCAS	160	31	28	31	27	31	27	31	28
YCAS	170	31	28	31	27	31	27	31	28
YCAS	180	31	28	31	27	31	27	31	28
YCAS	200	31	28	32	26	32	28	35	26
YCAS	210	31	28	32	26	32	28	35	26
YCAS	230	31	28	32	26	32	28	35	26

1" DEFL. ISOLATOR SELECTION
VMC TYPE CP-2- (SeeTable Below)

YCAS	A	B	C	D	E	F	G	H
130	31	28	31	26	31	27	31	26
140	31	28	31	26	31	27	31	26
150	31	28	31	27	31	27	31	28
160	31	28	31	27	31	27	31	28
170	31	28	31	27	31	27	31	28
180	31	28	31	27	31	27	31	28
200	31	28	32	26	32	28	35	26
210	31	28	32	26	32	28	35	26
230	31	28	32	26	32	28	35	26

TYPE & SIZE	MAX LOAD		DEFL.		SPRING
	lbs.	kg	in.	mm	COLOR
CP-2-26	1200	544.3	1.17	29.7	Purple
CP-2-27	1500	680.4	1.06	26.9	Orange
CP-2-28	1800	816.4	1.02	25.9	Green
CP-2-31	2200	997.9	0.83	21.0	Gray
CP-2-32	2600	1179.3	0.74	18.7	White
CP-2-35	3000	1360.8	0.70	17.7	Gold

2" DEFL. ISOLATOR SELECTION
VMC TYPE AWMR- (SeeTable Below)

YCAS	A	B	C	D	E	F	G	H
130	-1-552	-1-551	-1-552	-1-53	-1-552	-1-532	-1-553	-1-53
140	-1-552	-1-551	-1-552	-1-53	-1-552	-1-532	-1-553	-1-53
150	-1-552	-1-551	-1-552	-1-532	-1-553	-1-532	-1-552	-1-532
160	-1-552	-1-551	-1-552	-1-532	-1-553	-1-532	-1-552	-1-532
170	-1-552	-1-551	-1-552	-1-532	-1-553	-1-532	-1-552	-1-532
180	-1-552	-1-551	-1-552	-1-532	-1-553	-1-532	-1-552	-1-532
200	-1-553	-1-551	-2-531	-1-530	-1-553	-1-532	-2-531	-1-530
210	-1-553	-1-551	-2-531	-1-530	-1-553	-1-532	-2-531	-1-530
230	-1-553	-1-551	-2-531	-1-530	-1-553	-1-532	-2-531	-1-530

TYPE & SIZE	MAX LOAD		DEFL.	
	lbs.	kg	in.	mm
AWMR-1-53	1000	453.6	2	51
AWMR-1-530	1150	521.6	2	51
AWMR-1-531	1276	578.8	2	51
AWMR-1-532	1500	680.4	2	51
AWMR-1-551	1676	760.2	2	51
AWMR-1-552	1900	861.8	2	51
AWMR-1-553	2200	997.9	2	51
AWMR-2-531	2552	1157.6	2	51
AWMR-2-532	3000	1360.8	2	51

ISOLATOR DETAILS

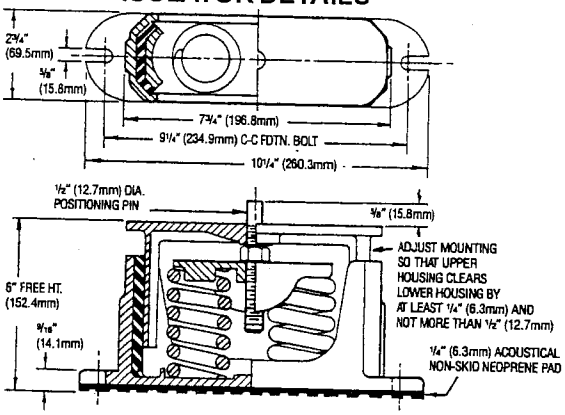

CP-2-XX LD01089

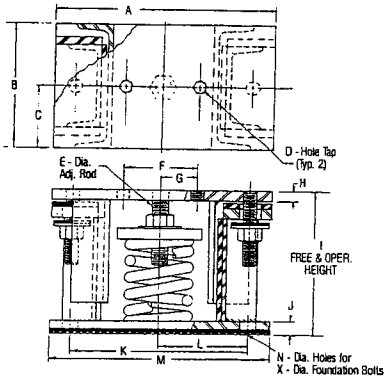

AWMR-1-XXX LD02973

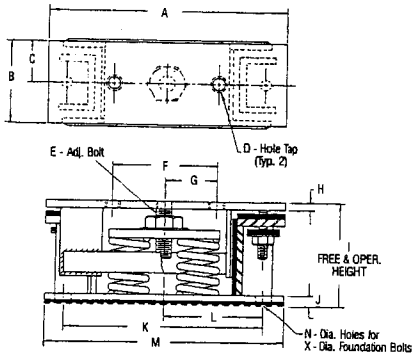

AWMR-2-XXX LD02974

FIG. 31 – ISOLATOR DETAILS

WEIGHT DISTRIBUTION AND ISOLATOR POSITIONS ISOLATOR MOUNT POSITIONS

Copper Fin Condenser Coils

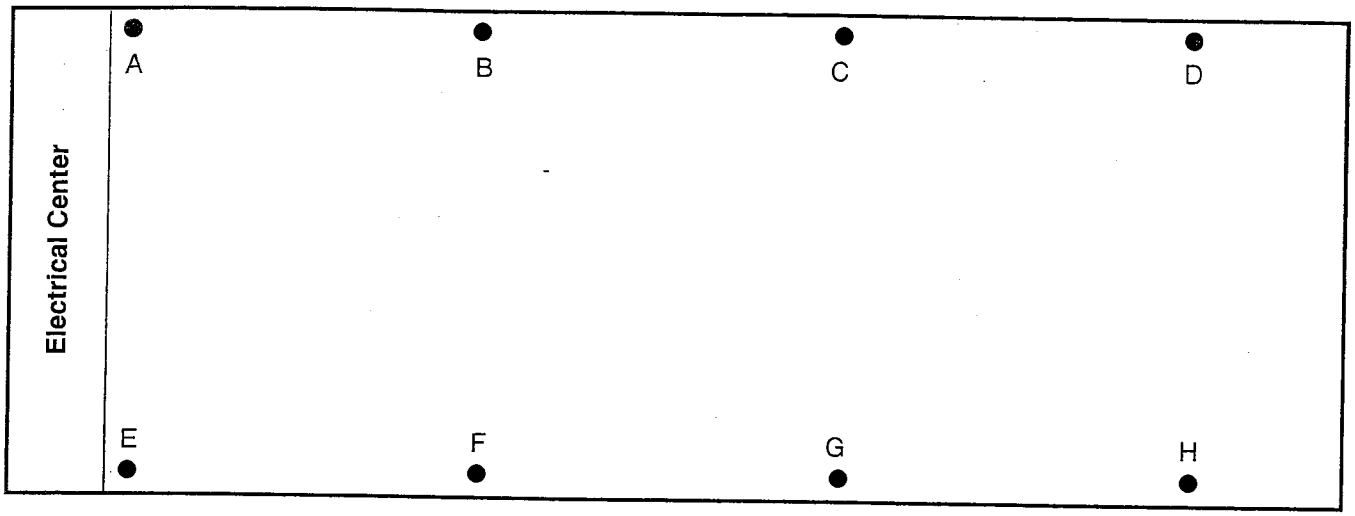

60 Hertz Weight Distribution by Model in Pounds

60Hz		A	B	C	D	E	F	G	H	Total
YCAS	130	1,656	1,515	1,833	853	1,679	1,287	1,883	875	11,581
YCAS	140	1,682	1,532	1,868	863	1,720	1,312	1,940	886	11,803
YCAS	150	1,740	1,403	1,693	1,270	1,900	1,370	1,648	1,505	12,529
YCAS	160	1,743	1,386	1,714	1,284	1,902	1,339	1,636	1,509	12,513
YCAS	170	1,745	1,407	1,730	1,289	1,904	1,374	1,661	1,514	12,624
YCAS	180	1,768	1,403	1,737	1,307	1,942	1,364	1,670	1,544	12,735
YCAS	200	1,988	1,558	2,318	1,092	2,115	1,407	2,502	1,125	14,105
YCAS	210	1,990	1,586	2,328	1,096	2,117	1,453	2,517	1,129	14,216
YCAS	230	1,993	1,614	2,337	1,100	2,120	1,502	2,528	1,133	14,327

60 Hertz, 2" Defl. Isolator Selection - VMC Type AWMR-X-XXX

60Hz		A	B	C	D	E	F	G	H
YCAS	130	-1-553	-1-552	-1-553	-1-530	-1-553	-1-532	-1-553	-1-530
YCAS	140	-1-553	-1-552	-1-553	-1-530	-1-553	-1-532	-1-553	-1-530
YCAS	150	-1-553	-1-552	-1-553	-1-532	-1-553	-1-532	-1-553	-1-552
YCAS	160	-1-553	-1-552	-1-553	-1-532	-1-553	-1-532	-1-553	-1-552
YCAS	170	-1-553	-1-552	-1-553	-1-532	-1-553	-1-532	-1-553	-1-552
YCAS	180	-1-553	-1-552	-1-553	-1-532	-1-553	-1-532	-1-553	-1-552
YCAS	200	-1-553	-1-552	-2-532	-1-532	-1-553	-1-552	-2-532	-1-532
YCAS	210	-1-553	-1-552	-2-532	-1-532	-1-553	-1-552	-2-532	-1-532
YCAS	230	-1-553	-1-552	-2-532	-1-532	-1-553	-1-552	-2-532	-1-532

60 Hertz, 1" Defl. Isolator Selection - VMC Type CP-2-XX

60Hz		A	B	C	D	E	F	G	H
YCAS	130	31	31	31	26	31	28	32	26
YCAS	140	31	31	31	26	31	28	32	26
YCAS	150	31	28	31	28	31	28	32	31
YCAS	160	31	28	31	28	31	28	32	31
YCAS	170	31	28	31	28	31	28	32	31
YCAS	180	31	28	31	28	31	28	32	31
YCAS	200	32	31	35	27	32	28	35	27
YCAS	210	32	31	35	27	32	28	35	27
YCAS	230	32	31	35	27	32	28	35	27

1" DEFL. ISOLATOR SELECTION
VMC TYPE CP-2- (SeeTable Below)

YCAS	A	B	C	D	E	F	G	H
130	31	31	31	26	31	28	32	26
140	31	31	31	26	31	28	32	26
150	31	28	31	28	31	28	32	31
160	31	28	31	28	31	28	32	31
170	31	28	31	28	31	28	32	31
180	31	28	31	28	31	28	32	31
200	32	31	35	27	32	28	35	27
210	32	31	35	27	32	28	35	27
230	32	31	35	27	32	28	35	27

TYPE & SIZE	MAX LOAD		DEFL.		SPRING
	lbs.	kg	in.	mm	COLOR
CP-2-26	1200	544.3	1.17	29.7	Purple
CP-2-27	1500	680.4	1.06	26.9	Orange
CP-2-28	1800	816.4	1.02	25.9	Green
CP-2-31	2200	997.9	0.83	21.0	Gray
CP-2-32	2600	1179.3	0.74	18.7	White
CP-2-35	3000	1360.8	0.70	17.7	Gold

2" DEFL. ISOLATOR SELECTION
VMC TYPE AWMR- (SeeTable Below)

YCAS	A	B	C	D	E	F	G	H
130	-1-553	-1-552	-1-553	-1-530	-1-553	-1-532	-1-553	-1-530
140	-1-553	-1-552	-1-553	-1-530	-1-553	-1-532	-1-553	-1-530
150	-1-553	-1-552	-1-553	-1-532	-1-553	-1-532	-1-553	-1-552
160	-1-553	-1-552	-1-553	-1-532	-1-553	-1-532	-1-553	-1-552
170	-1-553	-1-552	-1-553	-1-532	-1-553	-1-532	-1-553	-1-552
180	-1-553	-1-552	-1-553	-1-532	-1-553	-1-532	-1-553	-1-552
200	-1-553	-1-552	-2-532	-1-532	-1-553	-1-552	-2-532	-1-532
210	-1-553	-1-552	-2-532	-1-532	-1-553	-1-552	-2-532	-1-532
230	-1-553	-1-552	-2-532	-1-532	-1-553	-1-552	-2-532	-1-532

TYPE & SIZE	MAX LOAD		DEFL.	
	lbs.	kg	in.	mm
AWMR-1-53	1000	453.6	2	51
AWMR-1-530	1150	521.6	2	51
AWMR-1-531	1276	578.8	2	51
AWMR-1-532	1500	680.4	2	51
AWMR-1-551	1676	760.2	2	51
AWMR-1-552	1900	861.8	2	51
AWMR-1-553	2200	997.9	2	51
AWMR-2-531	2552	1157.6	2	51
AWMR-2-532	3000	1360.8	2	51

ISOLATOR DETAILS

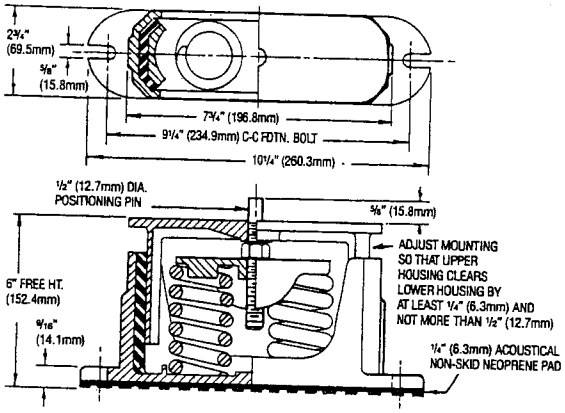

CP-2-XX

LD01089

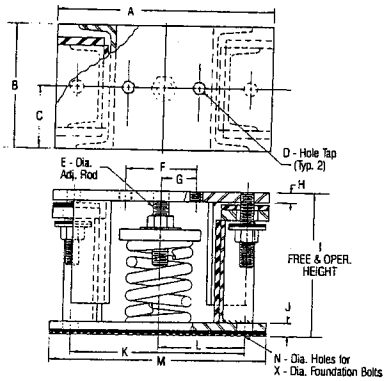

AWMR-1-XXX

LD02973

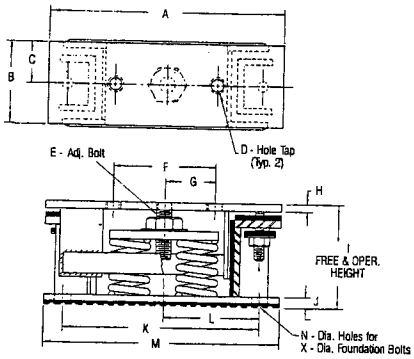

AWMR-2-XXX

LD02974

FIG. 32 – ISOLATOR DETAILS

REFRIGERANT FLOW DIAGRAM

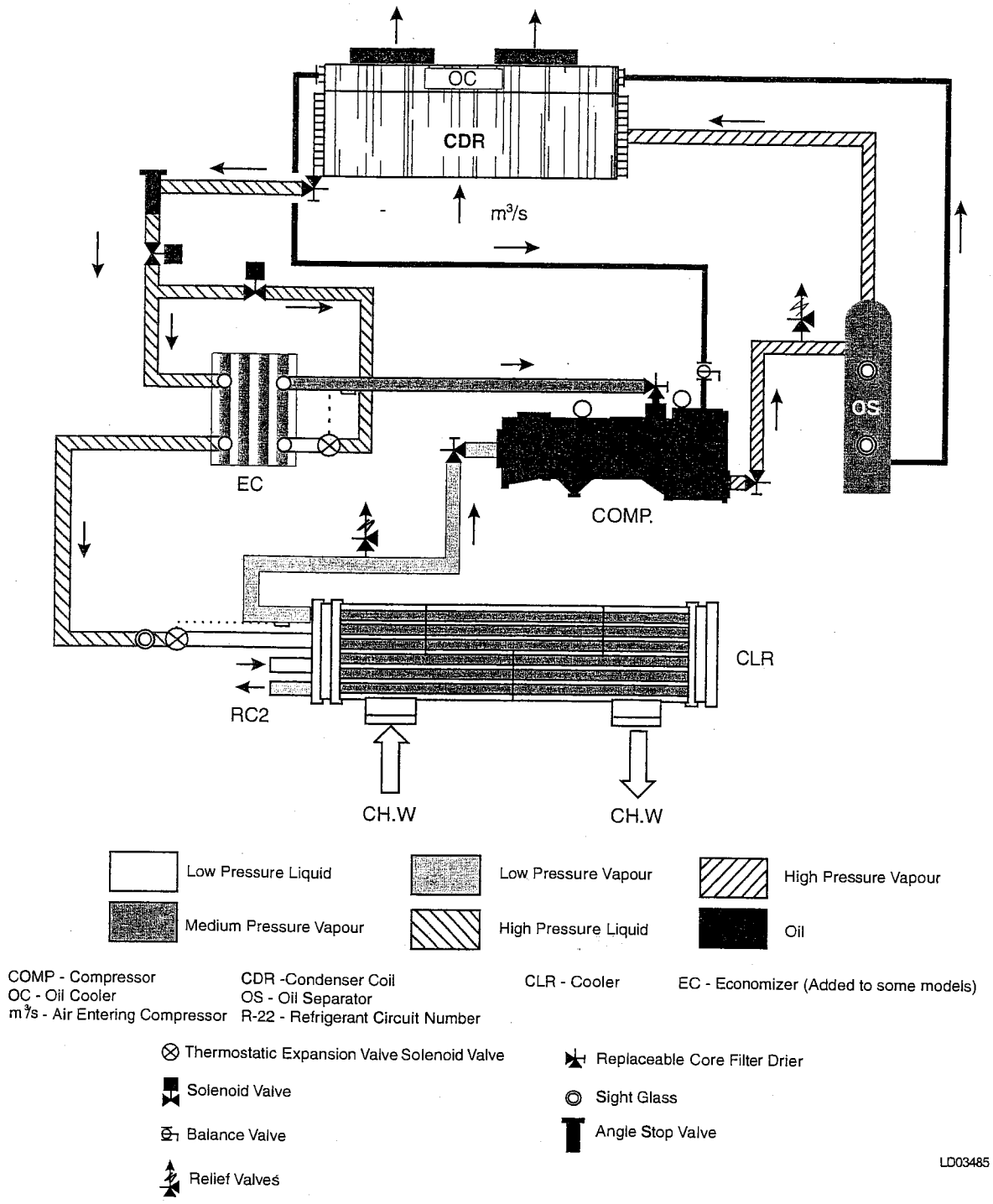

Low pressure liquid refrigerant enters the cooler and is evaporated and superheated by the heat energy absorbed from the chilled water passing through the cooler shell. Low pressure vapor enters the compressor where pressure and superheat are increased. High pressure vapor is assed through the oil separator where compressor oil is emoved and recirculated to the compressor via the oil cooler. The high pressure oil-free vapor is fed to the air cooled condenser coil and fans where the heat is removed. The fully condensed liquid enters the economizer.

A small percentage of the of the liquid passes through an expansion valve, into the other side of the economizer where it is evaporated. This low pressure liquid subcools the major part of the refrigerant. Medium pressure vapor then returns to the compressor. The subcooled refrigerant then passes through the expansion valve where pressure is reduced and further cooling takes place before returning to the cooler.

FIG. 33 – REFRIGERANT FLOW DIAGRAM

PROCESS AND INSTRUMENTATION DIAGRAM

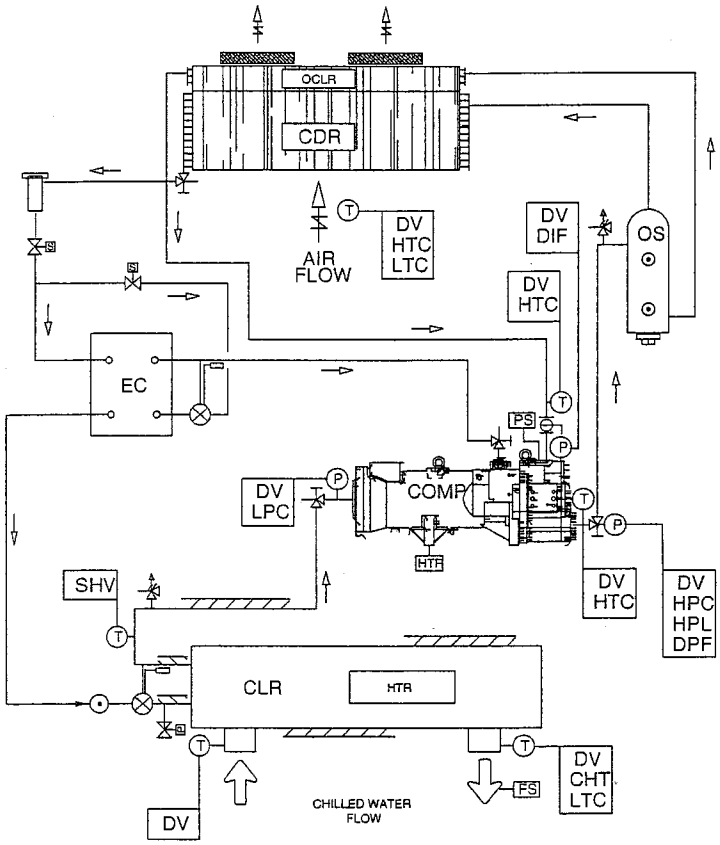

SYSTEM COMPONENTS

- EXPANSION VALVE, THERMOSTATIC
- SOLENOID VALVE
- BALL VALVE
- RELIEF VALVE
- STOP VALVE ANGLE, ACCESS
- PURGE VALVE
- PLUG
- PRESSURE SENSOR
- TEMPERATURE SENSOR
- REPLACEABLE CORE FILTER DRYER
- SIGHT GLASS
- FS FLOW SWITCH (option)
- PS PRESSURE SWITCH
- HTR ELECTRIC HEATER

MAJOR COMPONENTS

COMP	COMPRESSOR
CDR	CONDENSER COIL
CLR	COOLER
EC	ECONOMIZER
OCLR	OIL COOLER COIL
OS	OIL SEPARATOR

MICROPROCESSOR CONTROL FUNCTIONS

CHT	CHILLED LIQUID THERMOSTAT
DIF	DIFFERENTIAL PRESSURE CUTOUT
DFP	DISCHARGE PRESSURE FAN CONTROL
DV	DISPLAY VALUE
HPL	HIGH PRESSURE LOAD LIMITING
HTC	HIGH TEMPERATURE CUTOUT
LPC	LOW PRESSURE CUTOUT
LTC	LOW TEMPERATURE CUTOUT
SHV	SUPERHEAT VALVE

FIG. 34 – PROCESS AND INSTRUMENTATION DIAGRAM

COMPONENT LOCATIONS

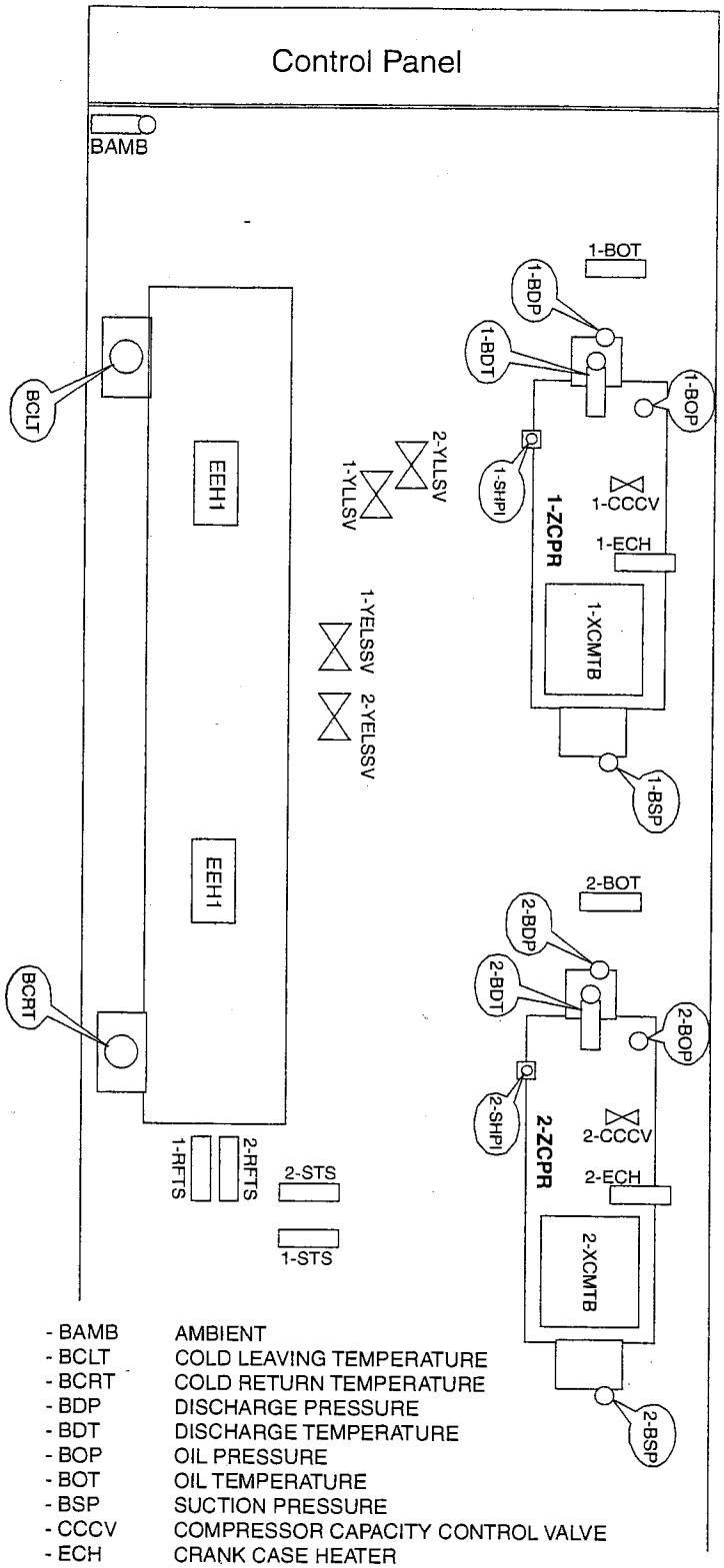

- BAMB AMBIENT
- BCLT COLD LEAVING TEMPERATURE
- BCRT COLD RETURN TEMPERATURE
- BDP DISCHARGE PRESSURE
- BDT DISCHARGE TEMPERATURE
- BOP OIL PRESSURE
- BOT OIL TEMPERATURE
- BSP SUCTION PRESSURE
- CCCV COMPRESSOR CAPACITY CONTROL VALVE
- ECH CRANK CASE HEATER
- EEH EVAPORATOR HEATER
- SHPI HIGH PRESSURE CUT-OUT
- STS SUCTION TEMPERATURE SENSOR
- RFTS REFRIGERANT FEED TEMPERATURE SENSOR (R407C only)
- XCMTB COMPRESSOR MOTOR TERMINAL BOX
- YELSSV ECONOMIZER LIQUID SUPPLY SOLENOID VALVE
- ZCPR COMPRESSOR

LD03487

FIG. 35 – COMPONENT LOCATIONS

COMPRESSOR COMPONENTS

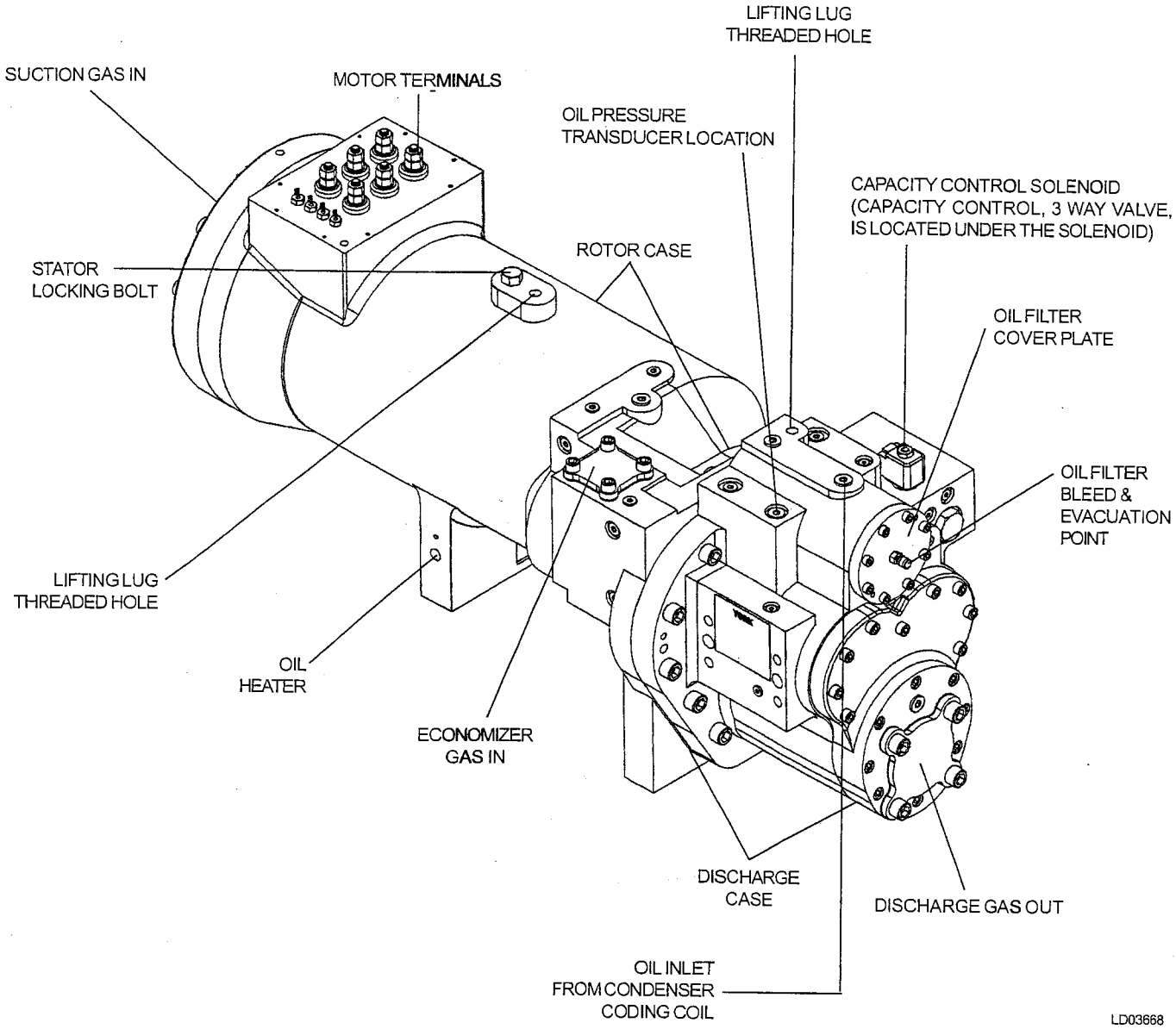

FIG. 36 – COMPRESSOR COMPONENTS

COMPRESSOR COMPONENTS - CONT'D

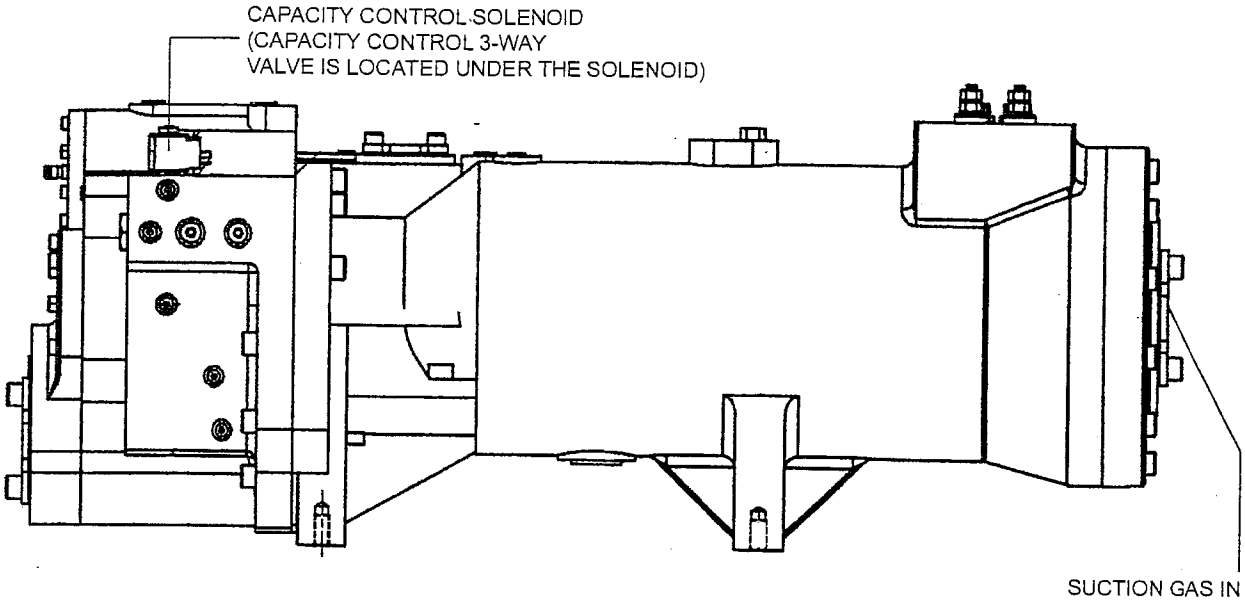

LD03669

FIG. 37 – COMPRESSOR COMPONENTS

COMPRESSOR COMPONENTS - CONT'D

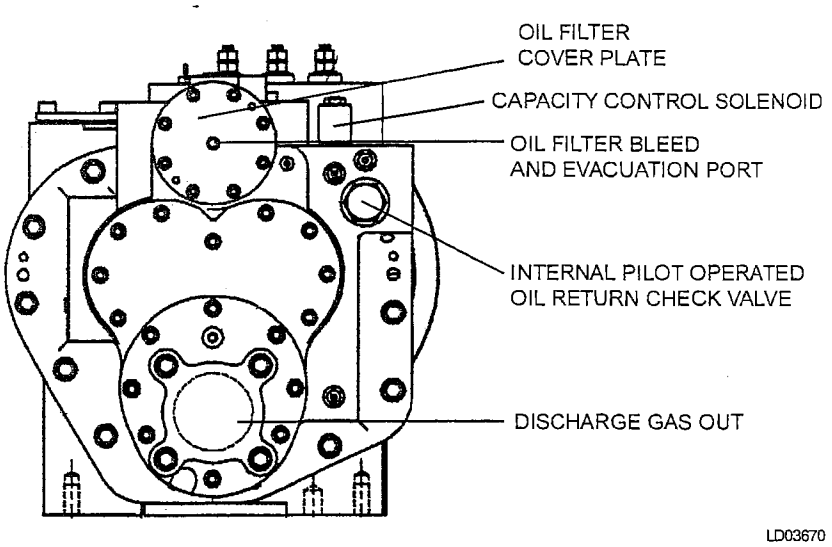

FIG. 38 – COMPRESSOR COMPONENTS

COMPRESSOR COMPONENTS - CONT'D

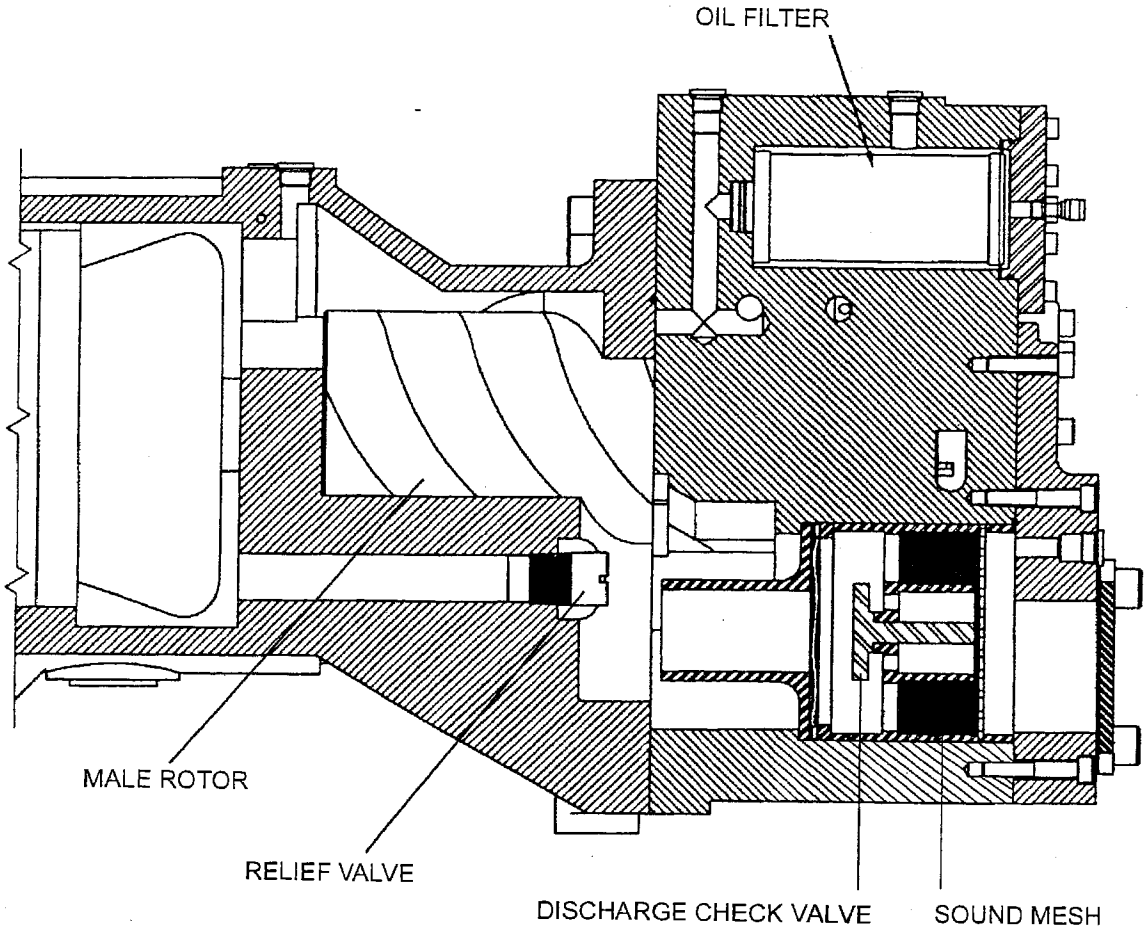

FIG. 39 – COMPRESSOR COMPONENTS

COMPRESSOR COMPONENTS - CONT'D

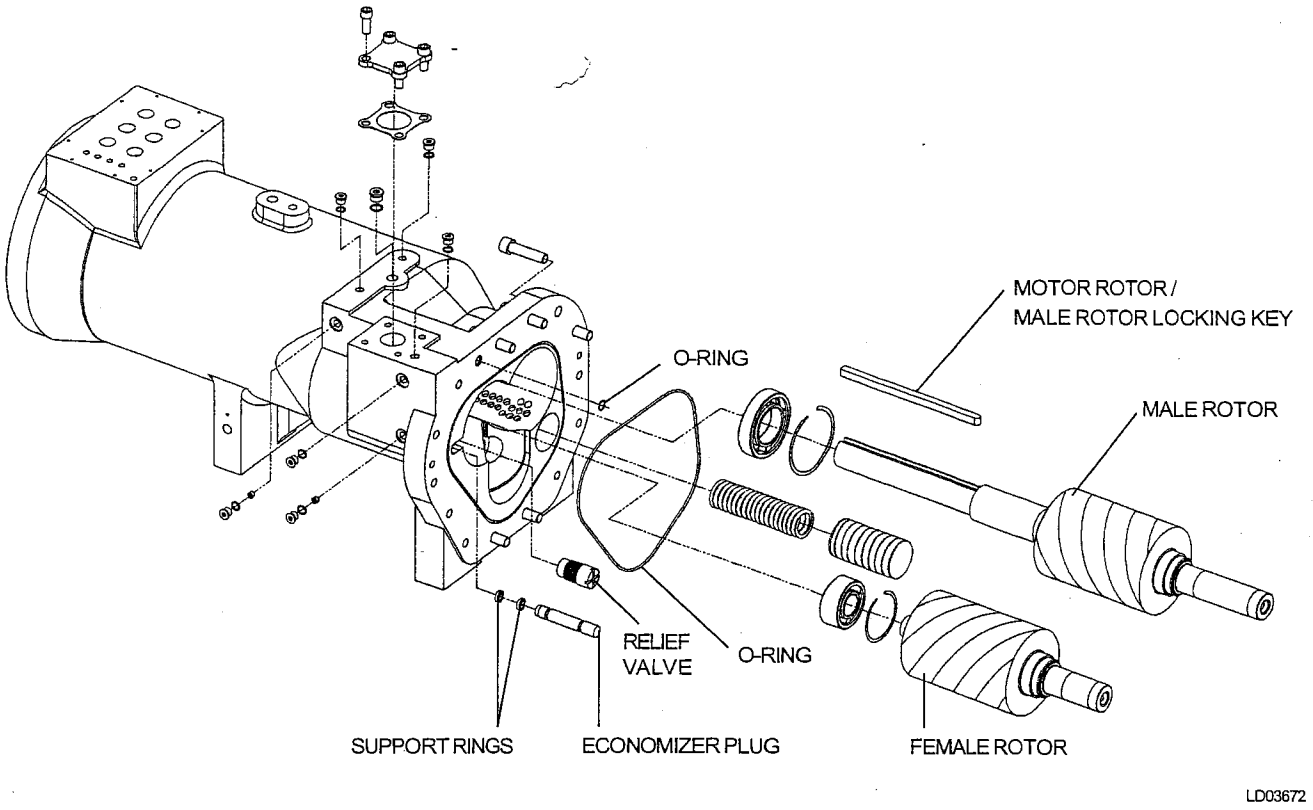

FIG. 40 – COMPRESSOR COMPONENTS

COMPRESSOR COMPONENTS - CONT'D

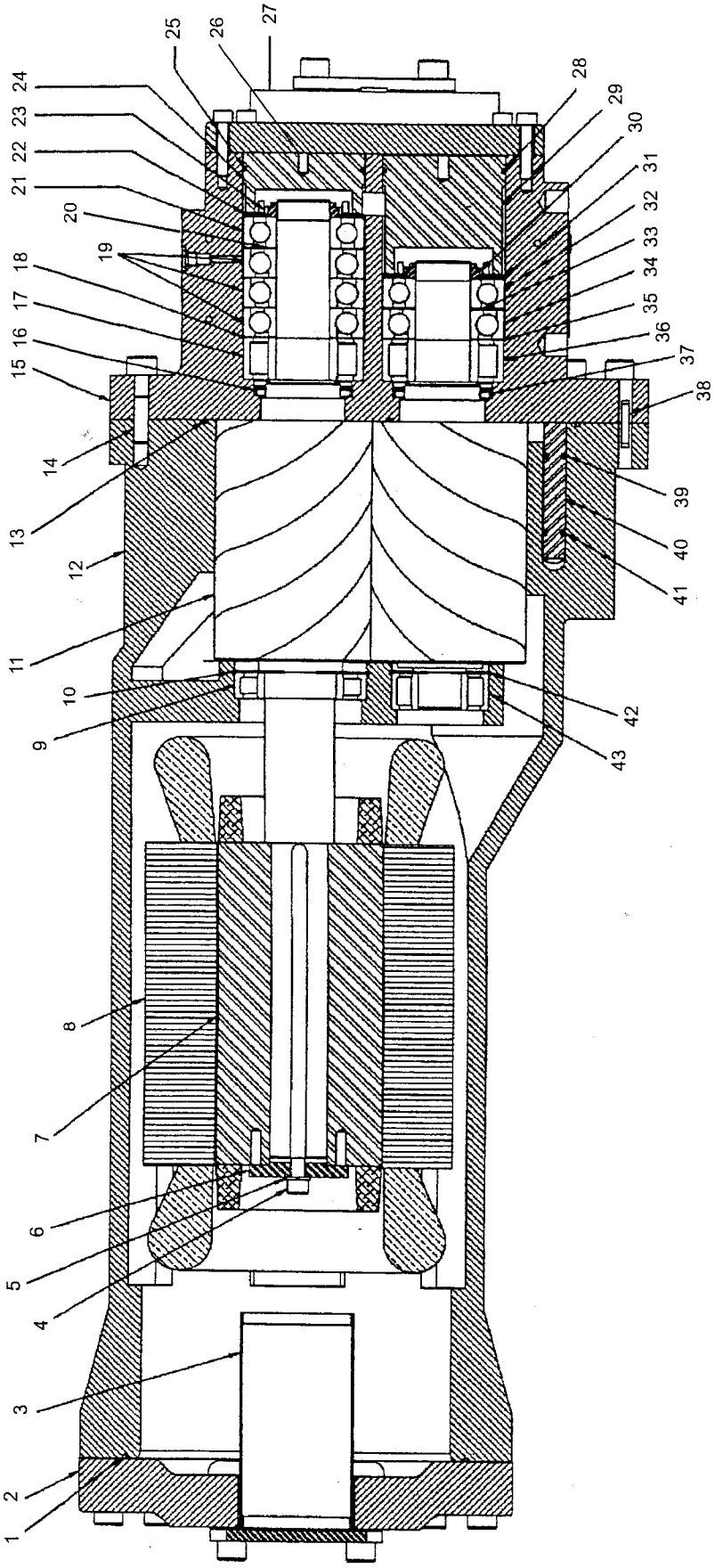

NO.	PART NAME
1	O-RING
2	SUCTION COVER
3	SUCTION STRAINER
4	ROTOR SCREW
5	ROTOR LOCK WASHER
6	ROTOR CLAMP WASHER
7	ROTOR
8	STATOR
9	MALE INLET BEARING
10	MALE ROTOR RETAINING RING
11	MALE ROTOR
12	ROTOR CASE
13	O-RING
14	DOWEL PIN
15	DISCHARGE CASE
16	LIP SEAL
17	DISCHARGE RADIAL BEARING
18	SPACER SHIM
19	THRUST BEARINGS
20	THRUST SPACE SHIM
21	REVERSE THRUST BEARING
22	BEARING CLAMP NUT
23	BEARING SPACER SLEEVE
24	BEARING PRELOAD SPRING
25	O-RING
26	BEARING BORE PLUG
27	DISCHARGE COVER
28	BEARING BORE PLUG
29	BEARING PRELOAD SPRING
30	BEARING SPACER SLEEVE
31	BEARING CLAMP NUT
32	REVERSE THRUST BEARING
33	THRUST SPACER SHIM
34	THRUST BEARINGS
35	SPACER SHIM
36	DISCHARGE RADIAL BEARING
37	LIP SEAL
38	DOWEL PIN
39	SUPPORT RING
40	ECONOMIZER PLUG
41	SUPPORT RING
42	FEMALE ROTOR RETAINING RING
43	FEMALE INLET BEARING

FIG. 41 – COMPRESSOR COMPONENTS

SYSTEM STARTUP CHECKLIST

JOB NAME:	
SALES ORDER #:	
LOCATION:	
SOLD BY:	
INSTALLING CONTRACTOR:	
START-UP TECHNICIAN/ COMPANY:	
START-UP DATE:	

CHILLER MODEL #:	
SERIAL #:	

COMPRESSOR #1	
MODEL#:	
SERIAL #:	
COMPRESSOR #2	
MODEL#:	
SERIAL #:	
COMPRESSOR #3	
MODEL#:	
SERIAL #:	
COMPRESSOR #4	
MODEL#:	
SERIAL #:	

CHECKING THE SYSTEM 24 HOURS PRIOR TO INITIAL START (No Power)

Unit Checks

- ❑ 1. Inspect the unit for shipping or installation damage.
- ❑ 2. Assure that all piping has been completed.
- ❑ 3. Check that the unit is properly charged and that there are no piping leaks.
- ❑ 4. Open each compressor suction service valve, discharge service valve, economizer service valve, liquid line stop valve, and oil line ball valves.
- ❑ 5. The compressor oil level should be maintained so that an oil level is visible in either of the two oil separator sight glasses. In other words, oil level should always be maintained, running or not, above the bottom of the lower sight glass and below the top of the upper sight glass.

  NOTE: In actual operation, due to splashing, an oil level may be seen in both sight glasses. Run the compressor for a few minutes, shut the system down, and assure there is an oil level showing in the bottom or top sight glass with the compressor off.

  If it is necessary to add oil, connect a YORK oil pump to the charging valve on the oil separator, but do not tighten the flare nut on the delivery tubing. With the bottom (suction end) of the pump submerged in oil to avoid entrance of air, operate the pump until oil drips from the flare nut joint, allowing the air to be expelled, and tighten the flare nut. Open the compressor oil charging valve and pump in oil until it reaches the proper level as described above.
- ❑ 6. Assure water pumps are on. Check and adjust water pump flow rate and pressure drop across the cooler.

  NOTE: Excessive flow may cause catastrophic damage to the evaporator
- ❑ 7. Check the control panel to assure it is free of foreign material (wires, metal chips, etc.) .
- ❑ 8. Visually inspect wiring (power and control). Wiring MUST meet N.E.C. and local codes. See Fig. 8, page 31.
- ❑ 9. Check tightness of power wiring inside the power panel on both sides of the motor contactors and inside the motor terminal boxes.
- ❑ 10. Check for proper size fuses in main and control circuits.
- ❑ 11. Verify that field wiring matches the 3-phase power requirements of the compressor. See chiller nameplate (Page 24).
- ❑ 12. Assure 115VAC Control Power to TB1 has 30A minimum capacity. See Fig. 8, page 31.
- ❑ 13. Be certain all water temp sensors are inserted completely in their respective wells and are coated with heat conductive compound.
- ❑ 14. Assure that evaporator TXV bulbs are strapped onto the suction lines at 4 or 8 o'clock positions.
- ❑ 15. Assure that 5 ton TXV bulbs are inserted fully into the wells in the compressors and that the bulbs are coated with heat conductive compound.
- ❑ 16. Assure that the 15 ton economizer TXV bulbs are strapped onto the compressor economizer supply lines at 4 or 8 o'clock positions.

PANEL CHECKS
(Power ON – Both System Switches "OFF")

- ❑ 1. Apply 3-phase power and verify its value (See Fig. 8, page 31).

- ❑ 2. Apply 115VAC and verify its value on the terminal block in the lower left of the Power Panel. Make the measurement between terminals 5 and 2 of TB1 (See Fig. 8, page 31). The voltage should be 115VAC +/- 10%.

- ❑ 3. Assure the heaters on each compressor are on. Allow the compressor heaters to remain on a minimum of 24 hours before startup. This is important to assure that no refrigerant is in the compressor oil at start-up!

- ❑ 4. Program the dip switches on the microprocessor board for the desired operating requirements. See Page 114. OPEN = Left side of switch pushed down. CLOSED = Right side of switch pushed down.

SWITCH	SWITCH "OPEN" SETTING	SWITCH "CLOSED" SETTING
1	Water Cooling	Brine Cooling
2	Standard Ambient Control	Low Ambient Control
3	Refrigerant R-407C	Refrigerant R-22

Verify the selections by pressing the OPTIONS Key on the control panel. Check them off.

CAUTION: Damage to the chiller could result if switches are improperly programmed.

NOTE: Dip switches 4 through 8 are spares and have no function.

- ❑ 5. Program the required operating values into the micro for cut-outs, safeties, etc. and record them in the chart below. See Page 129 for details.

If Default Values are desired for programming convenience, press the PROGRAM key, 6140, and ENTER. This loads default values. Record these values in the chart below.

PROGRAMMED VALUES
Refrigerant Type = _____
Dischg Press Cut-out = _____ PSIG (kPa)
Disch Press Unld = _____ PSIG (kPa)
Suction Press Cut-out = _____ PSIG (kPa)
High Amb Cut-Out = _____ °F (°C)
Low Amb Cut-Out = _____ °F (°C)
Leaving Chilled Liquid Temp Cut-Out = _____ °F (°C)
High Motor Current Unload = _____ % FLA
Anti-Recycle Time = _____ Secs

- ❑ 6. Program the Chilled Liquid Setpoint/Range and record:

  Setpoint = _____ °F (°C)

  Range = _____ to _____ °F (°C)

  Keep in mind that the Target temperature displayed by the micro should equal the desired leaving water temperature.

- ❑ 7. Assure that the CLK jumper J18 on the Microprocessor Board is in the ON position (Top 2 pins).

- ❑ 8. Set the Time and Date.

- ❑ 9. Program the Daily Schedule start and stop times.

INITIAL START-UP

After the control panel has been programmed and the compressor heater has been on for 24 hours prior to start-up, the chiller may be placed into operation.

- ❑ 1. Place the System Switches on the Microprocessor Board to the ON position.

- ❑ 2. The compressor will start and a flow of refrigerant will be noted in the sight glass. After several minutes of operation, the bubbles in the sight glass will disappear and there will be a solid column of liquid when the TXV stabilizes. After the water temperature stabilizes at desired operating conditions, the oil should be clear.

- ❑ 3. Allow the compressor to run a short time, being ready to stop it immediately if any unusual noise or adverse conditions develop. Immediately at start-up, the compressor will make sounds different from its normal high pitched sound. This is due to the compressor coming up to speed and lubrication changing from liquid refrigerant to oil. This should be of no concern and lasts for only a short time.

- ❑ 4. Check the system operating parameters. Do this by selecting various displays such as pressures and temperatures. Compare these to test gauge readings.

CHECKING SUPERHEAT AND SUBCOOLING

The subcooling should always be checked when charging the system with refrigerant and/or before setting the superheat.

When the refrigerant charge is correct, there will be no bubbles in the liquid sight glass with the system operating under full load conditions, and there will be 10 - 15°F (6-8°C) subcooled liquid leaving the condenser.

An overcharged system should be guarded against. Evidences of overcharge are as follows:

a. If a system is overcharged, the discharge pressure will be higher than normal. (Normal discharge/condensing pressure can be found in the refrigerant temperature/pressure chart; use entering air temperature +30°F (17°C) for normal condensing temperature.

b. The temperature of the liquid refrigerant out of the condenser should be not be more than 15°F (8°C) less than the condensing temperature (The temperature corresponding to the condensing pressure from the refrigerant temperature/pressure chart).

The subcooling temperature of each system should be calculated by recording the temperature of the liquid line at the outlet of the condenser and subtracting it from the recorded liquid line pressure at the liquid stop valve, converted to temperature from the temperature/pressure chart.

Example:

Liquid line pressure =		
202 PSIG converted to	102°F	(39°C)
minus liquid line temp.	- 87°F	(31°C)
SUBCOOLING =	15°F	(8°C)

The subcooling should be adjusted to 12 - 15°F (7-8°C).

❑ 1. Record the liquid line pressure and its corresponding temperature, liquid line temperature and subcooling below:

	SYS 1	SYS 2	SYS 3	SYS 4		
Liq Line Press =	___	___	___	___	PSIG	(kPa)
Temp =	___	___	___	___	°F	(°C)
Liq Line Temp =	___	___	___	___	°F	(°C)
Subcooling =	___	___	___	___	°F	(°C)

After the subcooling is set, the suction superheat should be checked. The superheat should be checked only after steady state operation of the chiller has been established, the leaving water temperature has been pulled down to the required leaving water temperature, and the unit is running in a fully loaded condition. Correct superheat setting for a system is 10 - 12°F (6-7°F).

The superheat is calculated as the difference between the actual temperature of the returned refrigerant gas in the suction line entering the compressor and the temperature corresponding to the suction pressure as shown in a standard pressure/temperature chart.

Example:

Suction Temp =	46°F	(8°C)
minus Suction Press 60 PSIG converted to Temp	- 34°F	(1°C)
	12°F	(7°C)

The suction temperature should be taken 6" (13 mm) before the compressor suction service valve, and the suction pressure is taken at the compressor suction service valve.

Normally, the thermal expansion valve need not be adjusted in the field. If, however, adjustment needs to be made, the expansion valve adjusting screw should be turned not more than one turn at a time, allowing sufficient time (approximately 15 minutes) between adjustments for the system and the thermal expansion valve to respond and settle out. Assure that superheat is set at 10 - 15°F (6 - 8°C).

❑ 2. Record the suction temperature, suction pressure, suction pressure converted to temperature, and superheat of each system below:

	SYS 1	SYS 2	SYS 3	SYS 4		
Suction Temp =	___	___	___	___	PSIG	(kPa)
Suction Press =	___	___	___	___	°F	(0°C)
Temp =	___	___	___	___	°F	(0°C)
Superheat =	___	___	___	___	°F	(0°C)

CHECKING ECONOMIZER SUPERHEAT (15 TON TXV)

The economizer superheat should be checked to assure proper economizer operation and motor cooling. Correct superheat setting is approx. 10 - 12°F (6 - 7°C).

The superheat is calculated as the difference between the pressure at the Economizer Service Valve on the compressor converted to the corresponding temperature in a standard pressure/temperature chart and temperature of the gas at the bulb on the entering piping to the motor housing.

Example:

Motor Gas Temp =	90°F	(32°C)
minus Economizer Press 139 PSIG converted to Temp	- 78°F	(26°C)
	12°F	(6°C)

Normally, the thermal expansion valve need not be adjusted in the field. If however, adjustment needs to be made, the expansion valve adjusting screw should be turned not more than one turn at a time, allowing sufficient time (approximately 15 minutes) between adjustments for the system and the thermal expansion valve to respond and settle out. Assure that superheat is set between 10 -12°F (6-7°C).

❑ 1. Record the motor gas temperature, economizer pressure, economizer pressure converted to temperature, and economizer superheat below:

	SYS 1	SYS 2	SYS 3	SYS 4		
Motor Gas Temp =	____	____	____	____	PSIG	(kPa)
Economizer Press =	____	____	____	____	°F	(°C)
Temp =	____	____	____	____	°F	(°C)
Superheat =	____	____	____	____	°F	(°C)

NOTE: This superheat should only be checked in an ambient above 90°F (32°C). Otherwise, mid-range adjustment (factory setting) is acceptable.

LEAK CHECKING

❑ 1. Leak check compressors, fittings, and piping to assure no leaks.

If the unit is functioning satisfactorily during the initial operating period, no safeties trip and the compressors load and unload to control water temperature, the chiller is ready to be placed into operation.

CHILLER CONTROL PANEL PROGRAMMING AND DATA ACCESS

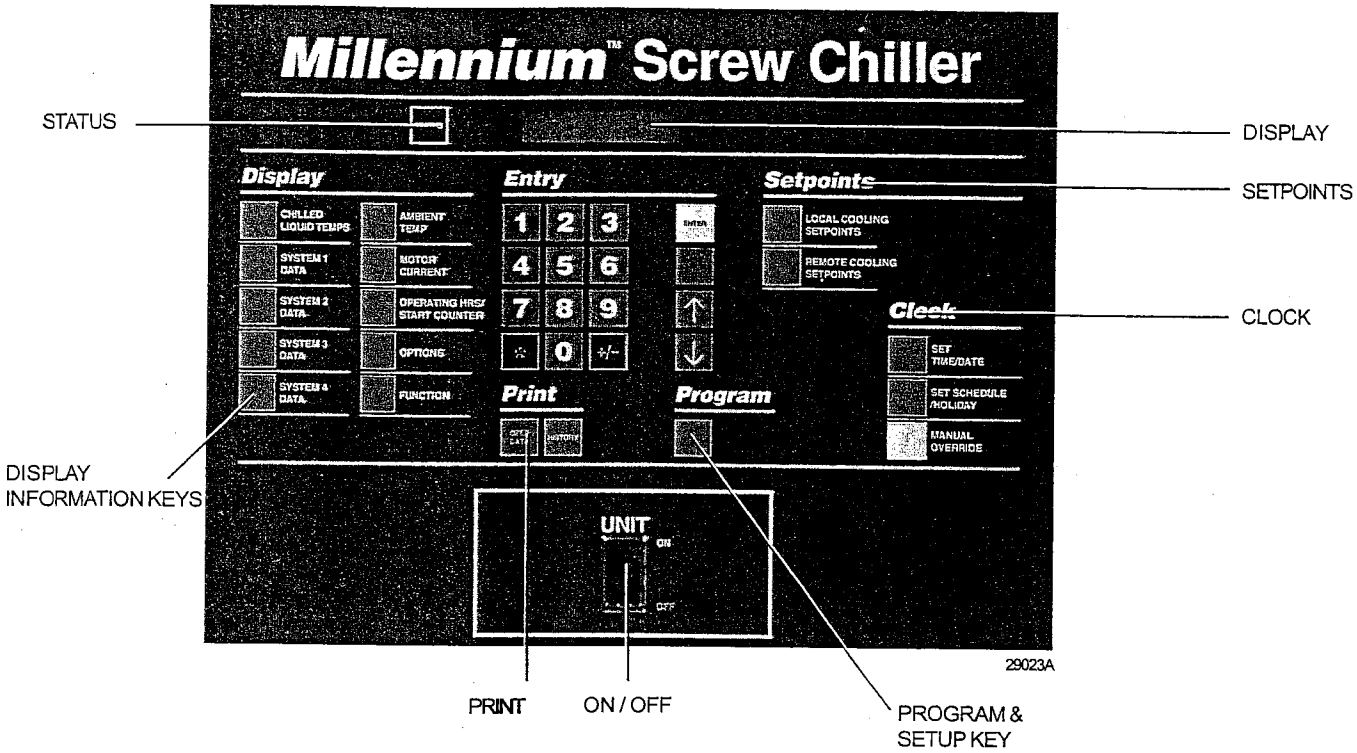

DISPLAY AND STATUS INFORMATION KEYS

Status Key - see Section 2

This key provides a display of the current operational and/ or fault status of the chiller or individual refrigerant systems.

Display Keys - see Section 3

Each key provides a real time display of commonly required information about the chiller and individual system operating conditions and settings.

Print Keys - see Section 4

These keys allow control panel display or remote printout of both current real-time operating and programmed data as well as fault history data from recent safety shutdowns.

ON / OFF ROCKER SWITCH

This switch shuts down the entire chiller when placed in the OFF position. The switch must be ON for the chiller to operate.

PROGRAM & SETUP KEYS

Entry Keys - see Section 5

The numeric and associated keys are used for entering data required for programming the chiller. The ENTER and ↑↓ keys are also used for scrolling through information available after pressing certain keys.

Setpoints Keys - see Section 6

These keys are used for display and programming of the local and remote offset chilled liquid temperature setpoints.

Clock Keys - see Section 7

These keys are used for display and programming of the clock and operating schedule for the chiller.

Program Key - see Section 8

This key is used for display and programming of the chiller operational settings and limits.

1. INTRODUCTION & PHYSICAL DESCRIPTION

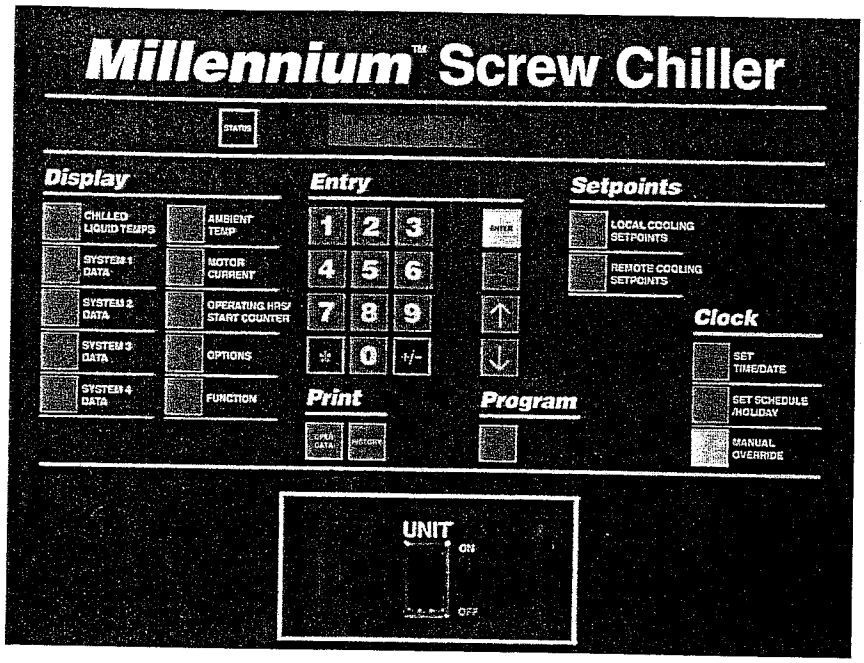

29023A

1.1 GENERAL

The YORK Millennium Screw Chiller Control Panel is a microprocessor based control system fitted to YCAS and YDAS liquid chillers. It is capable of multi-refrigerant system control to maintain chilled liquid temperature within programmed limits and to provide safety control of the chiller. The microprocessor monitors leaving chilled liquid temperature deviation from setpoint and the rate of change of this temperature to start, stop, load and unload compressors as required.

User interface is via a touch keypad and a liquid crystal display allowing access to operating and programmed data. Information can be displayed in English (Imperial) units or S.I. (Metric) units (Section 8.1). Conversion tables are provided at the back of this manual.

A master ON/OFF rocker switch is provided on the chiller control panel to activate or deactivate the complete chiller, while switches to activate or deactivate individual refrigerant systems are provided on the Microprocessor Board(s).

External interface is available for control of the chiller via a YORK ISN System or YORK Remote Control Center. In addition, EMS/BAS System connections are provided for remote cycling, current limiting, remote temperature setpoint reset and alarm annunciation.

YCAS chillers each have a single split circuit evaporator serving either 2, 3, or 4 independent refrigerant systems. YCAS 2 and 3 System chillers are configured as a single self contained section with a single control panel controlling the two refrigerant systems. YCAS 4 System chillers are divided into 2 sections.

1.2 KEYPAD & DISPLAY

An operator keypad allows complete control of the chiller from a central location. The keypad offers a multitude of commands available to access displays, program setpoints, and initiate system commands. Keys are grouped and color coded for clarity and ease of use.

A 40 Character Liquid Crystal Display (2 lines of 20 characters) is used for displaying system parameters and operator messages. The display has a lighted background for night viewing as well as a special feature which intensifies the display for viewing in direct sunlight.

Displays will be updated every two seconds by the microprocessor.

1.3 UNIT (CHILLER) ON / OFF SWITCH

A master UNIT (Chiller) ON / OFF switch is located just below the keypad. This switch allows the operator to turn the entire chiller OFF, if desired. The switch must be placed in the ON position for the chiller to operate. Any time the switch is in the OFF position, a Status message indication will be displayed. See Page 93 for the location of this switch.

1.4 MICROPROCESSOR BOARD

The Microprocessor Board(s) controls and makes decisions for the chiller. Information inputs from transducers and sensors around the chiller are either connected directly to the Microprocessor Board or are connected to the I/O Expansion Board and multiplexed before being sent to the Microprocessor Board. The Microprocessor Board circuitry multiplexes all of these analog inputs, digitizes them, and constantly scans them to monitor chiller operating conditions. Based on this information, the Microprocessor issues commands to the Relay Boards to activate and deactivate contactors, solenoids, etc. for chilled liquid, operating control, and safety control.

Commands are sent from the Microprocessor Board to the I/O Expansion Board to control the slide valves for chilled liquid control.

Keypad commands are acted upon by the micro to change setpoints, cutouts, scheduling, operating requirements, and to provide displays.

A +12VDC REG supply voltage from the Power Supply Board is converted to +5V REG by a voltage regulator located on the Microprocessor Board. This voltage is used to operate the integrated circuitry on the board.

System Switches 1 - 4

System Switches for each system are located on the Microprocessor Board (Section 1.11, Item 5). These switches allow the operator to selectively turn a given system on or off as desired.

Internal Clock & Memory Backup Battery

The Microprocessor Board contains a Real Time Clock integrated circuit chip (Section 1.11, Item 2) with an internal battery backup. The battery backup assures that any programmed values (setpoints, clock, cutouts, etc.) are not lost during a power failure or shutdown period regardless of the time involved.

The battery is a 10 year lithium type, but life will depend upon whether the Real Time Clock's internal clock circuit is energized. With the clock OFF, a rated life of approximately 10 years can be expected. With the clock ON, approximately 5 years. The clock is enabled and disabled using a jumper on the microprocessor board.

If the chiller is shut down or power failure is expected for extended periods, it may be desirable to disable the clock to save battery life. The clock can then be reactivated and reprogrammed when the chiller is returned to service. This will not affect the maintenance of programmed values and stored data by the backup battery.

While a chiller is operating, the clock must be ON (Section 1.11, Item 1) or the internal clock on the microprocessor will not be active and the micro cannot keep track of time, although all other functions will operate normally. Failure to turn the Clock ON could result in the chiller not starting due to the time "frozen" on the clock falling outside the Start/Stop time programmed in the Daily Schedule, see Section 7.3.

1.5 ANCILLARY CIRCUIT BOARDS

Power Supply Board

The on-board switching power supply is fuse protected and converts 24VAC from the logic transformer 2T to +12V REG which is supplied to the Microprocessor Board, Relay Output Boards, and the 40 character display to operate the integrated circuitry.

24VAC is filtered, but not regulated, to provide unregulated +24VDC to supply the flow switch, PWM remote temperature reset, PWM remote current reset, lead / lag select, and remote print circuitry which may be utilized with user supplied contacts.

24VAC is also filtered and regulated to +24VDC to be used by the optional EMS/BAS Circuit Boards for remote temperature or remote current reset.

Individual rectifier and filtering circuits are present which receive the Current Transformer signals for each phase of motor current on each compressor. These circuits rectify and filter the signals to variable DC. A phase rotation circuit for each compressor is also present to assure that the screw compressors do not run in the wrong direction. All of these signals are sent to the I/O Expansion Board which multiplexes them and then feeds them to the Microprocessor Board.

I/O Expansion Board

The I/O Expansion Board provides multiplexing to allow additional inputs to be connected to the Microprocessor Board via a single data line. The additional inputs are multiplexed according to the selection made by the Microprocessor through address lines.

Signals routed through the I/O Expansion Board include Discharge Temperature, Current Transformer outputs (motor current signals), and Oil Temperature.

Included on the I/O Expansion Board are the outputs for the slide valve control. This control consists of a Digital to Analog Converter (DAC) and power transistors to modulate current through the slide valve solenoids.

Relay Output Boards

One Relay Output Board per system operates the motor contactors / starters, solenoid valves, and heaters which control system operation.

The relay boards are located in the logic section of the control panel(s). The boards convert 0 - 12VDC logic levels outputs from the Microprocessor Board to 115VAC levels used by the contactors, valves, etc.

The common side of all relays on the Relay Output Board is connected to +12VDC REG. The open collector outputs of the Microprocessor Board energize the DC relays or triacs by pulling the other side of the relay coil to 0VDC. When not energized, both sides of the relay coils or triacs will be at +12VDC potential.

1.6 CIRCUIT BREAKERS

Three Circuit Breakers are provided for the 115VAC controls.

CB1 allows removal of control power from System 1 for control system circuitry servicing. Specifically, the 115VAC feed to Relay Output Board 1 which energizes contactors and solenoids.

CB2 allows removal of control power from System 2 for control system circuitry servicing. Specifically, the 115VAC feed to Relay output Board 2 which energizes contactors and solenoids.

CB3 allows removal of control power to the Microprocessor Board, Power Supply board, I/O Expansion Board, and Evaporator Heater.

CAUTION: The Circuit Breakers remove 115VAC control power only. High voltage circuitry will still be energized from the high voltage supply.

CAUTION: REMOVING 115VAC power to CB3 or opening CB3, removes power from the evaporator heaters. This could cause evaporator freeze-up in low ambient temperatures.

1.7 CURRENT TRANSFORMERS (C.T.)

C.T.'s located internally in the Motor Protector Modules on each of the 3 phases of the power wiring of each compressor motor send AC signals proportional to motor current to the Power Supply Board which rectifies and filters the signals to variable DC Voltage (analog). These analog levels are then fed to the Microprocessor Board via the I/O Expansion Board allowing the microprocessor to monitor motor currents for low current, high current, unbalanced current, and single phasing.

1.8 TRANSFORMERS

3 Transformers (2T, 3T, and 4T) are located in the Control Panel. These transformers convert the 115VAC Control Power Input to 24VAC to operate the microprocessor circuitry.

2T: This 75VA transformer supplies the microprocessor power supply.

3T: Supplies the I/O Expansion Board voltage for slide valve control.

4T: Supplies power to the Motor Protector Modules.

1.9 MOTOR PROTECTOR MODULES

A Motor Protector Module for each compressor is located in the Control Panel. These modules supply motor over-temperature protection, 3 phase current protection, phase imbalance, phase rotation, and a programming and troubleshooting 7 segment display.

The motor over-temperature protection is supplied by 3 temperature sensors imbedded in the motor windings 120 degrees apart. The module monitors these sensors allowing it to sense a hot winding and shut down the compressor if motor cooling is inadequate.

The on-board C.T.'s provide 3 phase current protection which look at 3 of the 6 motor legs and send an analog signal proportional to average motor current to I/O Expansion board and on to the microprocessor board for microprocessor low/high current protection and current display. This allows the micro to monitor current and shut a system down if low or high motor current is sensed. This is a non-adjustable protection circuit electronically sized to a system's motor specifications.

Internally, the on-board 3 C.T.'s and internal circuitry allow the Motor Protector Module to protect against high motor current as programmed on the Motor Protector dip switches. These switches are set at the factory according to motor specifications.

The module also provides phase rotation protection to assure the screw compressor does not rotate backwards.

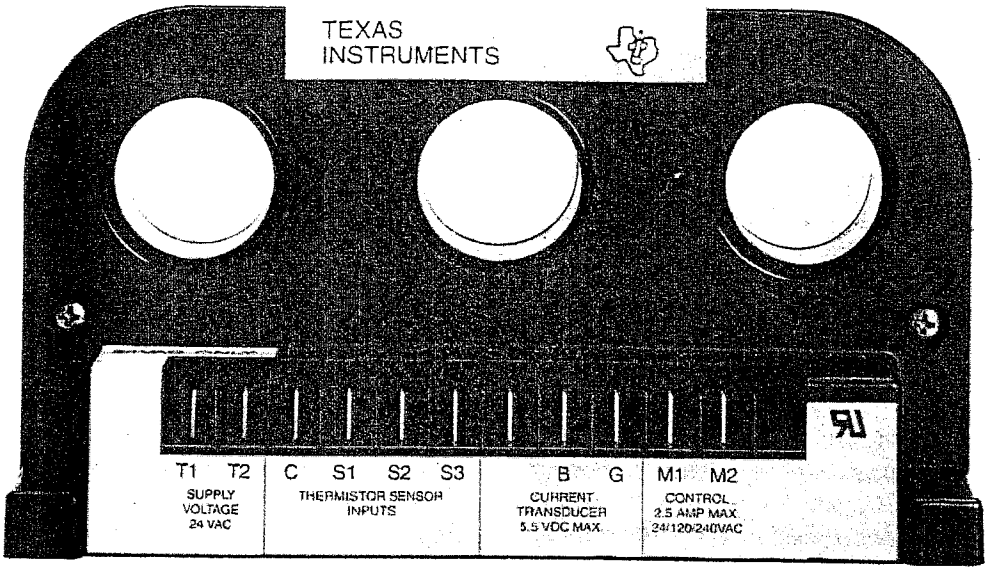

SIDE VIEW

29119A

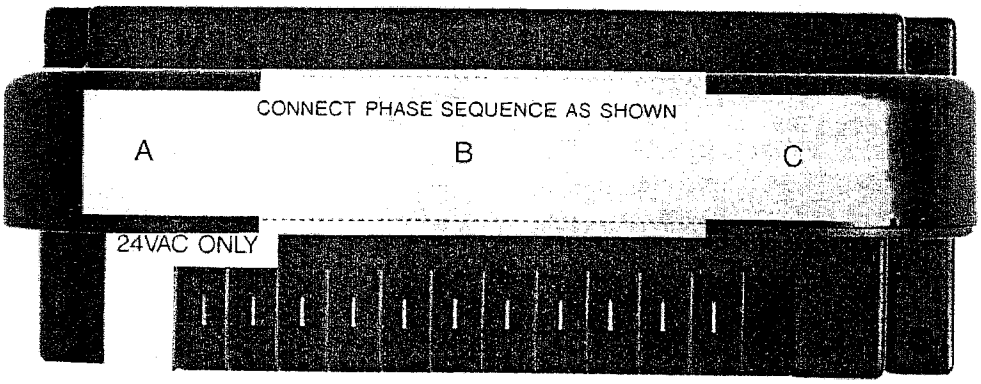

TOP VIEW

29121A

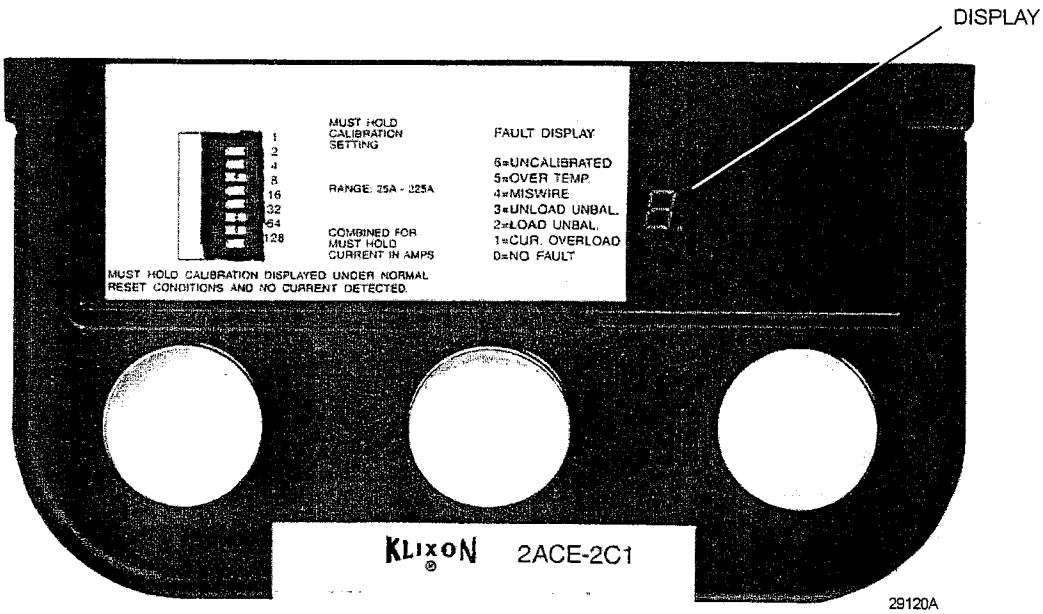

29120A

SIDE VIEW

FIG. 42 – MOTOR PROTECTOR

A single phase protection circuit located in the module so monitors for a phase imbalance. If current imbalance exceeds 17% of the average motor current in one of the phases, the Motor Protector will recognize it and shut the system down.

Whenever the Motor Protector Module senses a fault, internal contacts will open and shut the system down. These contacts are wired in series with the compressor motor contactor. When the contact opens, the micro will attempt to start the system 2 more times. Since the motor contactor signal path from the Relay Output Board to the motor contactor is broken by the Motor Protector Module contacts, it will lock the system out after 3 faults. The Motor Protector Module must then be reset by removing 115VAC power from the Control Panel. After the Motor Protector is reset, the individual system SYS switch must be switched OFF and then ON to reset the microprocessor to allow restart of the system. NOTE: Anytime the module faults, a thorough investigation of the problem should be performed before attempting to return the system to operation. Failure to perform this investigation could lead to motor or compressor failure. Additional details on the Motor Protector Module can be found on page 16.

1.10 EMS/BAS CONTROLS

The microprocessor system can accept remote signals to Start/Stop the chiller, to adjust maximum allowable running current for each compressor, and to adjust the chilled liquid leaving temperature setpoint. These functions can easily be controlled by connecting user supplied "dry" contacts to the customer terminals in the control panel. In addition, Alarm Contacts are provided to remotely signal a fault with the chiller.

Remote Start/Stop

Remote Start/Stop can be accomplished using a time clock, manual contact or other "dry" contact in series with the flow switch (Terminals 13 & 14 of TB4) connected to terminals in the logic section of the control panel. The contact must be closed to allow the chiller to run. Any time the contact opens, the chiller will shut down and the NO RUN PERM message will be displayed. The location of the flow switch connection is shown in Section 1.12.

NOTE: Never bypass a flow switch. This will cause damage to the chiller and void any warranties.

NOTE : Wiring from remote "dry" contacts (for stop/start reset functions) should not exceed 25 ft. (8 m) and should be run in grounded conduit that does not carry any wiring other than control wiring or in shielded cable. If an inductive device (relay, contactor) is supplying these contacts, the coil of the device must be suppressed with a suppressor YORK Part Number 031-00808-000 (60Hz models) or a standard RC suppressor (50Hz models) across the inductive coil.

Remote Current Reset

The maximum allowable running current for each compressor can be adjusted remotely to a lower value using repeated timed closure of "dry" contacts connected to Terminals 13 & 16 at the bottom center of the Microprocessor Panel (See Section 1.12) in the logic section of the control panel. The duration of the contact closure will determine the amount of adjustment. Generally, this input is used for purposes of demand limit and operates as follows :

Closing the input contact for a defined period of time allows reset of the % Current Limit downward. Contact closure of 1 - 11 seconds will allow % Current Limiting to be adjusted downward from 105% by a maximum of 75%, i.e. to a minimum value of 30% FLA. EMS Current Limiting operates independently of the High Average Current Unload (See Section 8.2). The micro will always look at the two Current Limit Setpoints and choose the lower as the controlling value, whenever Remote Current Limiting is utilized. Contact closures of less than 1 second will be ignored. A closure of 11 seconds is the maximum allowable closure and provides a Current Limit reduction of 75%. The remote reset current can be calculated as follows ;

$$\text{REMOTE RESET CURRENT} = 105\%\ \text{FLA} - \frac{\{(\text{Contact Closed Time} - 1\text{sec}) \times (75\%\ \text{FLA})\}}{10\ \text{sec}}$$

For example, after a 4 second pulse, the offset would equal:

$$\text{Remote Reset Curr} = 105\%\ \text{FLA} - \frac{\{(4\text{sec} - 1\ \text{sec}) \times (75\%\text{FLA})\}}{10\ \text{sec}}$$

$$= 105\% - \frac{225\%\text{FLA sec}}{10\ \text{sec}}$$

$$= 82.5\%\ \text{FLA}$$

To maintain a given offset, the contact closure signal must be repeated at not more than 30 minute intervals but not less than 30 seconds from the end of the each PWM signal. After 30 minutes, if no refresh is provided, the setpoint will change back to its original value.

NOTE: After an offset signal, the new Remote Current Limit may be viewed on the Remote EMS Limiting Display under the Motor Current Key (see Section 3.5). However, if this display is being viewed when the reset pulse occurs, the setpoint will not change on the display. To view the new offset, first press any other display key on the keypad and then press the Remote EMS Limiting Display.

NOTE: Remote EMS Reset will not operate when a Remote Control Center Option Kit is connected to the micro. The Remote Control Center will always determine the setpoint.

NOTE : Wiring from remote "dry" contact (for reset functions) should not exceed 25 ft. (8 m) and should be run in grounded conduit that does not carry any wiring other than control wiring or in shielded cable. If an inductive device (relay, contactor) is supplying these contacts, the coil of the device must be suppressed with a suppressor YORK Part Number 031-00808-000 (60Hz models) or a standard RC suppressor (50Hz models) across the inductive coil.

Remote Setpoint Reset

The chilled liquid leaving temperature setpoint programmed into the micro can be remotely adjusted to a higher value using repeated timed closure of "dry" contacts connected to Terminals 13 & 17 of TB4 in the logic section of the control panel (See Section 1.12). The duration of the contact closure will decide the amount of adjustment. This is achieved as follows :

The maximum allowable reset value can be programmed from 2°F - 40°F (1°C - 22°C), as appropriate to the application - see Section 6.4. Once the maximum reset is programmed, an input contact closure of 11 seconds provides the maximum reset. Closure for less than 11 seconds will provide a smaller reset. For noise immunity, the micro will ignore closures of less than 1 second. To compute the necessary contact closure time to provide a required Reset, use the following steps :

$$\text{Reset Temp Offset} = \frac{\{(\text{Contact Closure} - 1\text{sec}) \times \text{Programmed Max Reset}\}}{10\text{ sec}}$$

For example, with a programmed setpoint of 44°F (7°C), after a 4 second pulse and a programmed maximum offset of 40°F (22°C), the temperature offset would equal:

$$\text{Reset Temp} = \frac{(4\text{ sec} - 1\text{ sec}) \times 40°\text{F}}{10\text{ sec}}$$

$$\text{Reset Temp} = \frac{120°\text{Fsec}}{10\text{ sec}}$$

$$= 12°\text{F } (6°\text{C})$$

To determine the new setpoint, add the reset to the setpoint programmed into memory. In the example above, if the programmed setpoint = 44°F (7°C), **the new setpoint after the 4 second contact closure would be 44°F (7°C)+ 12°F (6°C) = 56°F (13°C).** This new setpoint can be viewed on the display by Pressing the Remote Reset Temperature/Range key.

To maintain a given offset, the contact closure signal must be repeated every 30 seconds - 30 minutes. The refresh is not accepted sooner than 30 seconds from the end of the last PWM signal, but must be refreshed before 30 minutes has elapsed. After 30 minutes, if no refresh is provided, the setpoint will change back to its original value.

NOTE: After an offset signal, the new Remote Setpoint may be viewed on the Remote Reset Temperature Range display. However, if this display is being viewed when the reset pulse occurs, the setpoint will not change on the display. To view the new offset, first press any other display key on the keypad and then press the Remote Reset Temperature Range key. The new setpoint will then appear.

NOTE: Remote Setpoint Reset will not operate when a Remote Control Center Option Kit is connected to the Micro. The Remote Control Center will always determine the setpoint.

NOTE : Wiring from remote "dry" contact (for reset functions) should not exceed 25 ft. (8 m) and should be run in grounded conduit that does not carry any wiring other than control wiring or in shielded cable. If an inductive device (relay, contactor) is supplying these contacts, the coil of the device must be suppressed with a suppressor YORK Part Number 031-00808-000 (60Hz models) or a standard RC suppressor (50Hz models) across the inductive coil.

1.11 MICROPROCESSOR BOARD LAYOUT

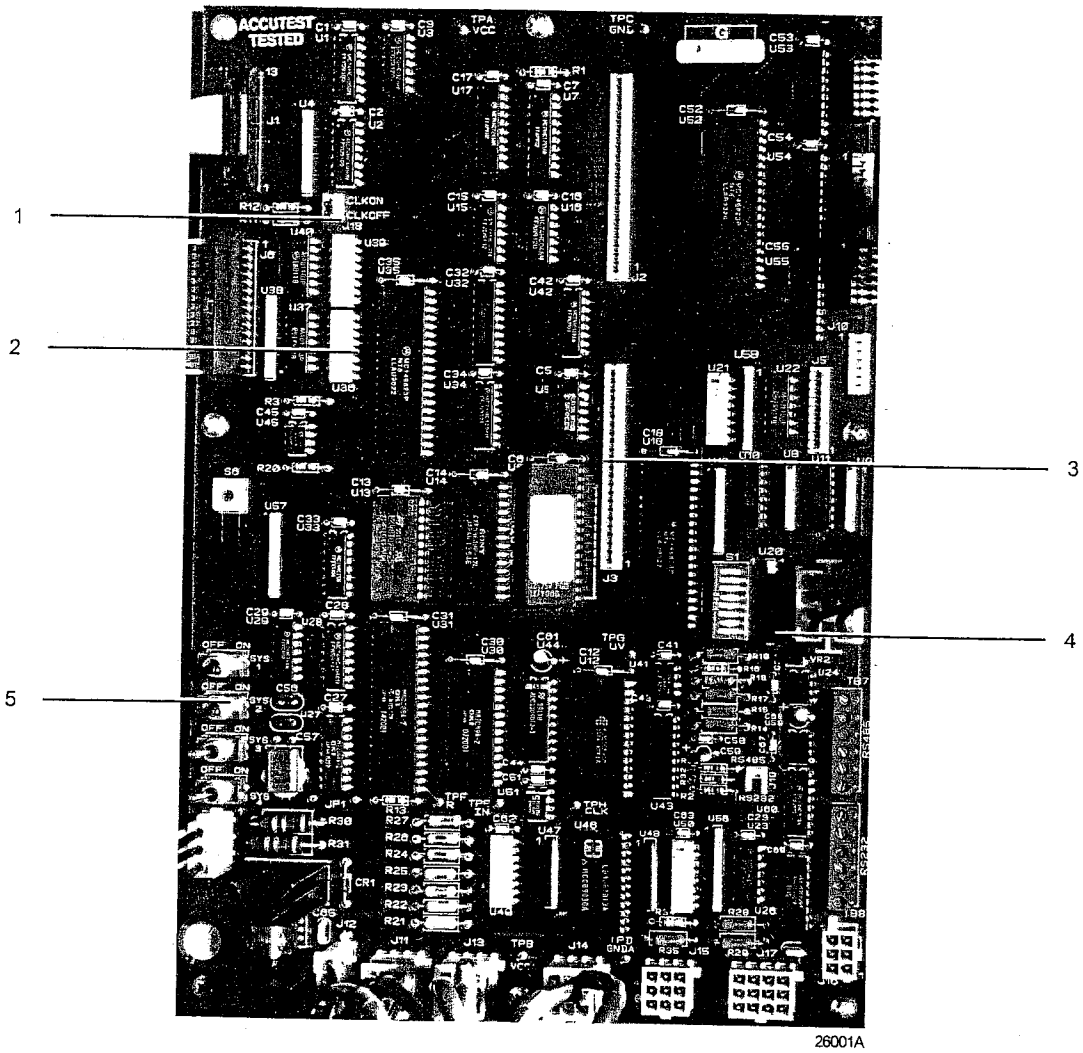

ITEM	DESIGNATION	DESCRIPTION
1	J18	Clock Enable/Disable Jump Contact
2	RTC (U13)	Real Time Clock and Battery Backup I.C.
3	EPROM	Microprocessor I.C. (label shows version) *NOTE : Dimple is positioned at top edge*
4	S1	Dip Switch Set (8 switches)
5	S2 to S5	System Switches S2 = System 1 S3 = System 2 S4 = System 3 S5 = System 4

FIG. 43 – COMPONENT LAYOUT

1.12 LOGIC SECTION LAYOUT

60 Hz Models :

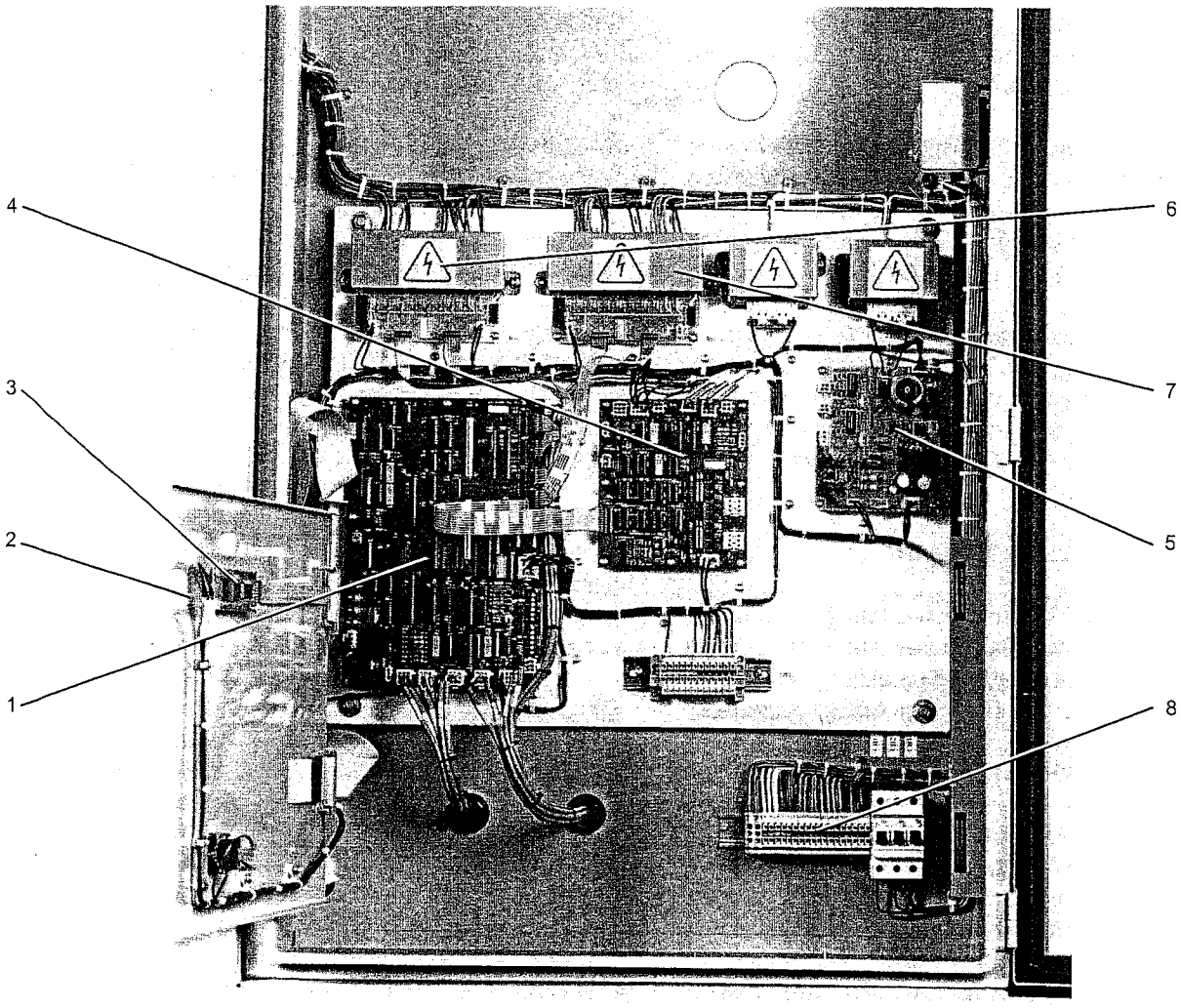

PHOTOGRAPH OF
60HZ MODEL LOGIC SECTION

ITEM	DESCRIPTION
1	Microprocessor Board
2	Back of Keypad
3	Back of Display
4	I/O Expansion Board
5	Power Supply Board
6	Relay Output Board #1
7	Relay Output Board #2
8	Flow Switch & Customer Connection Terminals

FIG. 44 – LOGIC SECTION LAYOUT

1.13 ANTI-RECYCLE TIMER

The programmable Anti-Recycle Timer allows the user to select the compressor anti-recycle time to best suit their needs. Motor heating is a result of inrush current when the motor is started. This heat must be dissipated before another start takes place or motor damage may result. The anti-recycle timer assures that the motor has sufficient time to cool before it is restarted.

An adjustable timer allows for the motor cooling, but gives the user the ability to extend the anti-recycle timer to cut down on cycling. In some applications, faster compressor start response is necessary and shorter anti-recycle times are required. These needs should be kept in mind but whenever possible the timer should be adjusted for the longest period of time tolerable. 600 seconds is recommended, although 300 seconds provides adequate motor cooling time. Longer periods will allow more heat dissipation, reduce cycling, and possibly increase motor life. See Section 8.2, page 129 for programming of the anti-recycle timer.

1.14 ANTI-COINCIDENCE TIMER

The Anti-Coincidence Timer assures that 2 systems do not start simultaneously. This assures that inrush current is kept to a minimum. A 60 second time delay will always separate motor starts. This timer is not programmable.

1.15 EVAPORATOR PUMP CONTROL

Dry contacts are provided which transition(close) when the Daily Schedule is calling for chiller operation and power has been applied to the micropanel for 30 seconds. If for some reason the evaporator pump contacts have been closed to run the pump and a power loss or Daily Schedule shuts the pump down (contacts open), the contacts will not reclose for any reason until 30 seconds has elapsed after power re-application or 30 seconds have elapsed between a Daily Schedule shutdown and restart.

1.16 COMPRESSOR HEATER CONTROL

Each compressor has its own heater. The heater will be off whenever the compressor is running. As soon as the compressor shuts off, the heater will turn on and stay on for 5 minutes. After 5 minutes has elapsed, the heater will shut off if the discharge temperature rises above 150 °F (66°C) and will turn on when the discharge temperature is equal to or less than 150 °F (66°C).

1.17 EVAPORATOR HEATER CONTROL

The evaporator heater is controlled by ambient temperature. When the ambient temperature drops below 40°F (4°C), the heater is turned on when the compressors are turned off. When the temperature rises above 45°F (7°C), the heater is turned off. An undervoltage condition will keep the heater off until full voltage is restored to the system. The heater will provide freeze protection to -20°F.

CAUTION: 115VAC power must remain "ON" through CB3 for freeze protection. Otherwise, the evaporator must be drained.

1.18 PUMPDOWN (LLSV) CONTROL

Each compressor undergoes a pump down cycle on start-up and shutdown. This assures that liquid refrigerant does not enter the compressor on start-up, eliminating the need for recycling pump down, saving energy and reducing compressor starts and wear.

On start-up, the controls unload the compressor and the system either pumps down to the low suction pressure cutout setting or pumps down for 15 seconds, whichever comes first, after which the Liquid Line Solenoid Valve is energized and normal operation commences.

On shutdown, the microprocessor controls unload the compressor and the Liquid Line Solenoid Valve and Economizer/Motor Cooling Liquid Supply Solenoid Valve are de-energized. The compressor continues to operate until it either pumps down to the low suction pressure cutout setting or for 180 seconds, whichever comes first. Pump down occurs on "normal" shutdowns where cooling demand has been satisfied or when a system switch is turned off, a flow switch opens, run permissive is lost or a Daily Schedule or a Remote Shutdown is called for. No pumpdown will occur on a safety shutdown. See page 102 for the pumpdown display message.

1.19 ALARMS

Internal contacts are provided in the Power Panel (See Section 1.12) which can be used to remotely signal a warning whenever a fault lockout occurs on any system or if power is lost to the control panel. The internal contacts are normally open (N.O.) and will close when control power is applied to the panel, if no fault conditions are present. When a fault occurs which locks out a system or the chiller power is lost, the contacts open.

Contacts for SYS 1 are located on the bottom right of the microprocessor panel, terminals 23 and 24. SYS 2 contacts are located on terminals 27 and 28. See Fig. 9, Page 34 for the location of these terminals.

A 28VDC or 120VAC (60Hz models) or up to 240VAC (50Hz models) external alarm circuit (supplied by others) may be connected to these contacts. The contacts are rated at 125VA.

NOTE : If any inductive load devices (relay or contactor) supplied by the user are in the electrical circuit connected to the dry alarm contacts, the device must be suppressed at the load with a RC suppressor YORK Part Number 031-00808-000 across the inductive coil. (Typically, several are supplied loose with the panel). Failure to install suppressors will result in nuisance faults and possible damage to the chiller.

NOTE : If the alarm circuit is applied in an application used for critical duty (such as process duty or cooling other critical equipment) and the alarm circuit should fail to function, YORK will not be liable for damages.

1.20 RUN STATUS (CHILLER)

Chiller Run Status contacts between Terminal 28 and 29 close whenever one of the systems is running. These contacts are located on the bottom right of the Microprocessor Board and are rated (voltage and current) the same as the alarm contacts (Section 1.19). Also use a suppressor, same as alarm contacts (Section 1.19). Individual system "Run Status" is not available.

1.21 LEAD / LAG COMPRESSOR SELECTION

The chiller may be set up for AUTO or MANUAL Lead / Lag. This is accomplished by programming the option under the Program Key. Details for programming the Manual/Auto Lead/Lag Selection are discussed in Program Key Section 8, page 129.

When AUTO Lead/Lag is utilized, the micro attempts to balance run time between the two compressors. A number of conditions can occur which will prevent this from happening. Factors determining lead/lag selection and the resulting lead/lag determination are:

1. The micro automatically defaults the lead to SYS 1 and the lag to SYS 2 if both compressors are ready to start (Anti-recycle Timers timed out) and compressors have equal run time.
2. In YCAS 3 System models, SYS 2 is assigned first lag and SYS 3 the second lag. The same lead/lag assignment occurs with YDAS models with SYS 4 assigned as the third lag. Individual system run status is not present.
3. If all compressors are ready to start (Anti-recycle timers timed out), the compressor with the lowest run hours will start first.
4. If all compressors are waiting to start (Anti-recycle timers have not timed out), the micro will assign the lead to the compressor with the shortest anti-recycle time in a an effort to provide cooling quickly.
5. If the lead compressor is locked out, faulted and waiting to restart, SYS switch on the microboard is off, or a run permissive is keeping an individual system from running, the lag (first lag in YCAS 3 System and YDAS models) compressor is swapped to the lead. This is true regardless of whether the lag compressor is ON or OFF.

MANUAL Lead/Lag selection will be automatically overridden by the micro to allow the lag compressor to automatically become the lead anytime the selected lead compressor shuts down due to a lock-out, lead system faults and is waiting to restart, lead switch on the micro board is in the OFF position, or if a run permissive is keeping the lead of the system off. Automatic switchover in MANUAL mode is provided to try to maintain chilled liquid temperature as close to setpoint as possible.

1.22 3 or 4 COMPRESSOR CHILLER CONFIGURATION

The EPROM's are identical in 3 and 4 compressor units. To place the software in 3 compressor mode, a jumper must be connected between J4-3 and +24V on the microboard. This connection can be made between terminals 13 and 75 on the terminal block. If the jumper is not installed, the unit will operate as a 4 compressor unit.

2. STATUS KEY: GENERAL STATUS MESSAGES & FAULT WARNINGS

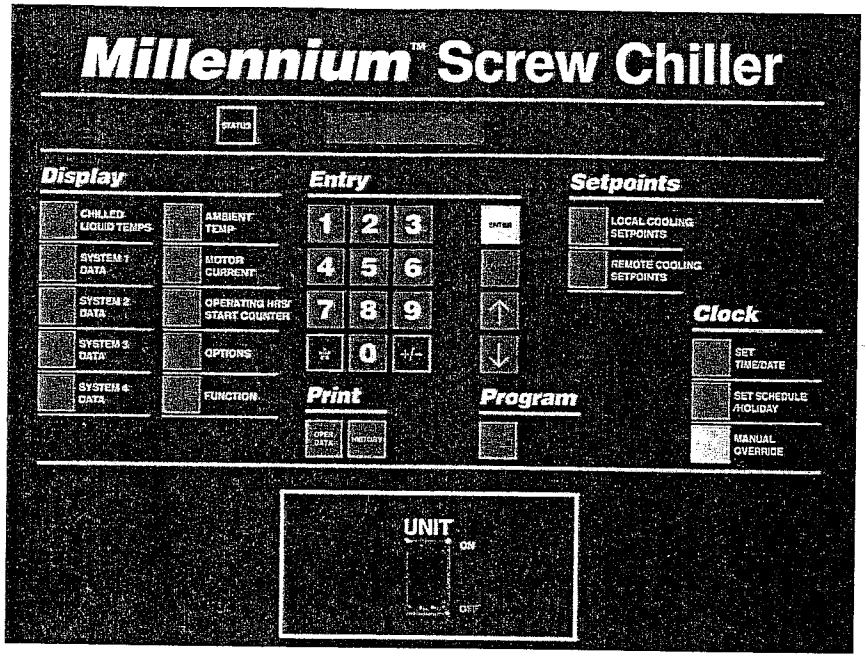

29023A

2.1 GENERAL

Pressing the Status key displays the current chiller or individual system operational status. The messages displayed include running status, cooling demand, fault status, external cycling device status, load limiting, and anti-recycle timer status. The display will show one message relating to the "highest priority" information as determined by the microprocessor.

For individual system status or fault messages, the display shows information for up to two refrigerant systems. For models with three or four systems, pressing the Status key again will show messages for Systems 3 and 4.

The main categories of messages available using the Status key are :

- **2.2 General Status Messages**
- **2.3 Unit Warnings**
- **2.4 Anticipation Control Status Messages**
- **2.5 Chiller Fault Status Messages**
- **2.6 System Fault Status Messages**

These messages are described in detail below, with examples of each display. In each example "#" is used as applicable to represent the system number where messages apply to individual systems.

2.2 GENERAL STATUS MESSAGES

Unit Switch OFF :

```
UNIT SWITCH OFF
SHUTDOWN
```

This message indicates that the Chiller ON / OFF Switch on the Control Panel is in the OFF position which will not allow the chiller to run.

Schedule Shutdown :

```
DAILY SCHEDULE
SHUTDOWN
```

This message indicates that the that the chiller has been shut down by the daily schedule programmed into the Clock - Set Schedule / Holiday system (Section 7.3).

Remote Controlled Shutdown :

```
REMOTE CONTROLLED
SHUTDOWN
```

This message indicates that either an ISN or RCC (Remote Control Center) has turned the unit OFF through the RS-485 port.

Compressors Running :

```
SYS # COMP RUNNING
SYS # COMP RUNNING
```

This message indicates that the respective compressor is running due to demand.

System Switches OFF :

```
SYS # DSCH LIMITING
SYS # DSCH LIMITING
```

This message indicates that the system switch on the Microprocessor Board for the respective system is in the OFF position. A system can only run if the system switch is in the ON position. The switch for System 1 and System 2 should normally be in the ON position for all models. Switches for System 3 and 4 should only be in the ON position for three and four compressor chillers respectively. See Section 1.11, Figure 28 for the location of the system switches.

Anti-Recycle Timers :

```
SYS # AR TIMER  0 S
SYS # AR TIMER 120 S
```

The anti-recycle timer message shows the amount of time remaining before a compressor can be called to restart. These 300 - 600 sec. timers begin timing when a compressor starts, although a minimum of two minutes must always elapse after a compressor shuts down, before it may again restart. If a power failure occurs, the anti-recycle timers will reset to 120 seconds after power is restored. The purpose of the timer is to allow for motor cooling to dissipate the heat generated by inrush current at start-up.

Anti-Coincidence Timers :

```
SYS #   COMP RUNNING
SYS #  AC TIMER 22 S
```

The anti-coincident timer guards against two or more compressors starting simultaneously. This avoids excessive instantaneous starting currents. A minimum of 60 seconds between compressor starts is maintained even if demand is present and the anti-recycle timers are timed out. The display shows the time before the respective compressor can start. This display will only appear after the anti-recycle timers have timed out.

Run Permissive Contacts OPEN :

```
SYS # NO RUN PERM
SYS # NO RUN PERM
```

This display indicates that an external cycling contact and/or the flow switch connected to terminals 13 & 14 in the Logic Section(s) of the control panel(s) is/are open. Whenever the contact(s) is /are open, the No Run Permissive message will be displayed and the indicated system will not run.

System Loading Requirement :

```
SYS # NO COOL LOAD
SYS # NO COOL LOAD
```

This message indicates that chilled liquid temperature is below the point where the microprocessor will bring the lead system on and/or that the loading sequence has not loaded the chiller far enough to bring the lag system on. The lag system will display this message until the loading sequence is ready for the lag system to start.

2.3 UNIT WARNINGS

Unit Warnings are often caused by conditions which require operator intervention to start the unit or extreme operating conditons. All setpoints and programmable values should be checked, if a chiller shutdown occured, before restarting the chiller. Unit Warnings are not logged into the HISTORY BUFFER.

Low Battery Warning

```
!! LOW BATTERY !!
CHECK PROG/SETP/TIME
```

On power-up the microprocessor will check the RTC (Real Time Clock) memory back-up battery to make sure it is still operational. Provided the battery checks out, operation will continue normally. If a check is made and the battery has failed, the microprocessor will not allow the chiller to run and the above Status message will appear.

If a low battery condition exists, the micro will restore programmed cutouts, setpoints, and schedules to their default values.

Once a low battery condition is detected, the only way to run the chiller is to use the Manual Override key - see Section 7.4. This allows reprogramming of setpoints, cutouts, and schedule.

The U13 RTC chip should be replaced as soon as possible with Part # 031-00955-000. Otherwise, the chiller will shutdown and lose all programmed points, and require a MANUAL OVERRIDE restart, if a power failure occurs.

Pump Down:`

```
SYS 1 PUMPING DOWN
SYS 2 PUMPING DOWN
```

This message indicates that both refrigerant systems are in a pumpdown cycle. Pumpdown display messages occur on shutdowns where the cooling load has been met, or when a system switch is turned OFF. Note that only one compressor could be pumping down, as shown in the following display:

```
SYS 1 PUMPING DOWN
SYS 2 COMP RUNNING
```

See Section 1.18 (page 102) for details of pumpdown control.

Incorrect Refrigerant Warning :

```
REPROGRAM TYPE OF
REFRIGERANT TO RUN
```

The incorrect Refrigerant Warning will occur if the DIP Switch setting for refrigerant type and the type programmed into the micro "at the factory" are not the same. This message will be displayed until the non-programmable "factory" programmed refrigerant type and DIP Switch setting agree.

Power Failure Warning :

The Power Failure Warning will only be displayed on "power restoration" after a "power loss", if manual restart on power failure is selected under the PROGRAM key (Page 129). If manual restart on power failure has been selected, the following warning message is displayed indefinitely on power restoration and the chiller will not run until the UNIT Switch is cycled OFF-and-on to restart the unit. This safety is available for users who desire a chiller lock-out on power failure. NOTE: This is typically not a desirable feature.

```
!! POWER FAILURE !!
CYCLE UNIT SWITCH
```

When this message appears, the chiller will not run and the Unit Switch must be cycled OFF and ON to start the unit.

2.4 ANTICIPATION CONTROL STATUS MESSAGES

Anticipation controls are built into the software to prevent safety shutdowns by automatically overriding the temperature controls, if system conditions approach safety thresholds. This avoids total loss of cooling resulting from a lockout by a safety control.

Anticipation controls monitor discharge pressure, motor current and suction temperature for each compressor and if maximum limits are approached, the slide valve loading of the respective compressor will be reduced to avoid exceeding the limit.

Displays of anticipation safety control messages and their meanings are as follows:

Discharge Pressure Limiting :

```
SYS # DSCH LIMITING
SYS # DSCH LIMITING
```

Discharge Pressure Limiting takes effect when compressor discharge pressure nears the point at which the high pressure cutout would shut the system down. When the above message appears, discharge pressure has exceeded the programmable threshold and the compressor is being unloaded in an effort to prevent shutdown on the high pressure cutout. The operation of this safety is important if condenser coils become dirty, if there is a problem with the condenser fan operation, or if extreme ambient or load conditions occur (see Section 8.2 / High Discharge Pressure Unload Point [page 129] for more details).

Compressor Motor Current Limiting :

```
SYS # CURR LIMITING
SYS # CURR LIMITING
```

The Motor Current Limiting message indicates that a compressor motor current has reached a programmable, Bas, or remote limit and the system is being unloaded to assure that motor current does not become excessively high causing a fault (see also Section 8.2 / High Motor Current Unload Point, page 131; Section 3.5, Motor Current Key, page 112; Section 1.10, page 98).

Suction Temperature Limiting :

```
SYS # SUCT LIMITING
SYS # SUCT LIMITING
```

The Suction Temperature Limiting message applies only when the chiller is set for Water Cooling Mode (see page 113). The message indicates that saturated suction temperature on a system has dropped to 29°F (-2°C) and that any further temperature reduction could cause some icing of the evaporator tubes. Saturated suction temperature is computed by the micro by converting suction pressure to temperature.

For the first 3 minutes that the saturated suction temperature is at or below 29°F (-2°C) any further compressor loading is inhibited to allow time for the temperature to rise. If the condition persists for more than 3 minutes, a 5 minute timer is started. As this timer counts down to zero, a 1 second unload pulse will be sent to the slide valve of the affected compressor every 5 seconds as long as the temperature is below 31°F (-1°C). If the temperature rises above 31°F (-1°C), the micro will inhibit loading for the remainder of the 5 minute period.

If after the 5 minute period the saturated suction temperature is above 29°F (-2°C), the compressor is allowed to reload, if required, to maintain leaving chilled water. Otherwise, the micro will reset the 5 minute timer and start the process over again. To assure that leaving chilled water requirements are satisfied while one compressor is under Suction Temperature Limiting control, the micro will start or load other compressor(s) as necessary.

2.5 UNIT FAULT STATUS MESSAGES

A Unit Fault will shut the entire chiller down when a preset safety threshold is exceeded. The chiller will automatically restart after the condition causing the shutdown clears. Restart will occur only after anti-recycle timers are satisfied and cooling demand requires additional cooling. A reset hysteresis is built into each safety so repetitive faulting and clearing will not occur in a short time period.

Continuous monitoring by the microprocessor assures that instantaneous reactions result. When the chiller is shut down on one of these safeties, a message will appear on the Status display informing the operator of the problem as shown in the text that follows.

Any time that a Unit Fault occurs, the shutdown will be logged into the HISTORY BUFFER.

Low Ambient Temperature Cutout:

```
UNIT FAULT
LOW AMBIENT TEMP
```

The Low Ambient Temperature Safety protects the chiller from running in very low temperatures which could cause damage due to low system pressures. This feature is programmable and can also be used to shut down the chiller at a temperature where continued running of the chiller is not economical compared to the use of "free" cooling techniques (see also Section 8.2 / Low Ambient Temperature Cutout [page 131]). The fault will clear when ambient temperature rises 2°F (1°C) above the cut-out.

High Ambient Temperature Cutout:

```
UNIT FAULT
HIGH AMBIENT TEMP
```

The High Ambient Temperature Safety protects the chiller from running in ambients above 130°F (54°C) where potential malfunction of system mechanical and electrical components may result. The High Ambient Cutout is programmable and can be set for lower limit values if required (see also Section 8.2 / High Ambient Temperature Cutout [page 131]). The fault will clear when ambient temperature drops 2°F (1°C) below the cut-out.

Low Leaving Chilled Liquid Temperature Cutout:

```
UNIT FAULT
LOW LIQUID TEMP
```

The Low Water Temperature Safety assures that the evaporator is not damaged from freezing due to improperly set control points. It also attempts to protect the chiller from freezing, if the flow switch should fail. Whenever the chilled liquid temperature drops below the programmable cutout, the chiller will shut down (see also Section 8.2 / Leaving Water Temperature Cutout, page 131). The chiller fault will clear when temperature rises 4°F (2°C) above the cut-out and cooling demand exists.

115VAC Under Voltage Cut-Out:

```
UNIT FAULT
115VAC UNDER VOLTAGE
```

The Under Voltage Safety assures that the system is not operated at voltages where malfunction of the microprocessor could result in system damage. Whenever the microprocessor senses an on-board control power supply failure while a compressor is running, the chiller is shut down. The microprocessor circuitry is capable of operating at voltages 10% below the nominal 115VAC supply to the panel. Auto-restart of the chiller occurs after a 2 minute start-up timer has elapsed from the time when power is re-applied, if the AUTO RESTART ON POWER FAILURE is enabled. Otherwise the chiller must be manually reset. See Section 8.2 (page 132).

Flow Switch Open :

```
SYS # NO RUN PERM
SYS # NO RUN PERM
```

Closure of the flow switch(es) is monitored to check that flow is present in the evaporator when a compressor is running. Any external cycling devices fitted by the customer are connected in series with the flow switch(es). YCAS 2 System chillers have a single flow switch wired to the control panel. YCAS 3 System chillers have two flow switches mounted together with one wired to each control panel. YDAS chillers have two flow switches, one mounted in the flow from each evaporator and wired to the associated control panel. If the flow switch opens, all systems controlled by the panel it is connected to will shut down and a NO RUN PERM (Permissive) message will be displayed. Closing of the flow switch, when flow is present, will cause the message to disappear and auto-restart to occur.

CAUTION: ***Never bypass a flow switch. This will cause damage to the chiller and void any warranties.***

2.6 SYSTEM FAULT (SAFETY) STATUS MESSAGES

A System Fault will shut the affected system down whenever a preset safety threshold is exceeded for 3 seconds. Automatic restart will occur after the first 2 shutdowns when the anti-recycle timer times out and temperature demand exists. After any combination of 3 Manual Reset Safeties in a 90 minute time period, the affected system will shut down and lock out on the last fault. When one or more systems are shut down on one of these safeties, a message will appear on the Status display informing the operator of the problem.

NOTE: The High Motor Current Safety is a unique safety which will lock out a system after only a single fault.

To reset a locked out system, turn the System Switch for the affected system to the OFF position, then back to the ON position (see Section 1.11, Fig. 28 for switch locations).

CAUTION: Before returning a locked out system to service, a thorough investigation of the cause of the fault should be made. Failure to repair the cause of the fault while manually allowing repetitive restarts may cause further expensive damage to the system.

High Discharge Pressure Cutout :

```
SYS # HIGH DSCH PRES
SYS # HIGH DSCH PRES
```

The Discharge Pressure Safety prevents system pressure from exceeding safe working limits. This safety is a backup for the mechanical High Pressure Cutout in each system. The Discharge Pressure Safety is programmable for a range of values below the system upper limit (see Section 8.2 / Page 129, High Discharge Pressure Cutout for more details).

High Discharge Temperature Cutout :

```
SYS # HIGH DSCH TEMP
SYS # HIGH DSCH TEMP
```

This safety protects the compressor rotors from damage due to overheating, expansion, and breakdown of the oil film seal between the rotors. It also protects against excessive oil temperature in the discharge oil separator.

For the first 4 seconds of operation discharge temperature is ignored. After 4 seconds of operation the compressor will shut down if the discharge temperature exceeds 260°F (127°C).

High Oil Differential Pressure Cutout :

```
SYS # HIGH OIL DIFF
SYS # HIGH OIL DIFF
```

The High Oil Pressure Differential Safety protects the compressors against loss of proper lubrication due to oil return line blockage. The "differential oil pressure" for this safety is computed by measuring discharge (oil separator) pressure and subtracting oil pressure returning to the compressor (Discharge - Oil = Oil PSID). Under typical operation, the oil pressure differential display will read less than 25 PSID (1.7 bar). If oil pressure at the compressor drops due to filter blockage, the differential pressure on the display will increase and when the maximum limit is reached the compressor will be shut down.

This safety is activated after 3 minutes of operation. Oil pressure must be less than 65 PSID (4.4 bar) for R22 models as long as the compressor continues to run.

Low Oil Differential Pressure Cutout :

```
SYS # LOW OIL DIFF
SYS # LOW OIL DIFF
```

The Low Oil Pressure Differential Safety assures the compressor receives proper lubrication by monitoring the differential between oil pressure returning to the compressor and suction pressure. Lack of a differential indicates that the compressor is not pumping and no oil is being pumped through the compressor to lubricate the bearings and rotors.

This type of oil failure will not be picked up by the High Oil Differential Safety since no flow will cause the differential through the oil piping to drop to zero.

EXAMPLE:

For ambients above 50°F (10°C), the Low Oil Differential Safety is activated after 1 minute of compressor operation when the oil pressure differential must be greater than 10 PSID (.7 bar). After 2 minutes it must be greater than 20 PSID (1.4 bar); after 3 minutes, 30 PSID (2 bar); after 4 minutes, 40 PSID (2.7 bar); and from 5 minutes of operation and onwards, oil pressure must remain higher than 50 PSID (3.4 bar) or the system will be shut down. For lower ambients, the linear ramp times are as follows:

AMBIENT TEMP		RAMP TIME
>50°F	(10°C)	5 Minutes
>45°F	(7°C)	6 Minutes
>40°F	(4°C)	7 Minutes
>35°F	(2°C)	8 Minutes
>30°F	(-1°C)	9 Minutes
<=30°F	(-1°C)	10 Minutes

High Oil Temperature Cutout :

```
SYS # HIGH OIL TEMP
SYS # HIGH OIL TEMP
```

This safety assures oil temperature does not exceed a safe operating temperature which affects compressor lubrication. Typical oil temperature during normal operation will be approximately 130 - 150°F (54 - 66°C).

The High Oil Temperature Safety is activated after 2 minutes of compressor operation, after which if oil temperature is above 225°F (107°C) for more than 3 seconds, the compressor will shut down.

Low Suction Pressure Cutout :

SYS # LOW SUCT PRESS
SYS # LOW SUCT PRESS

The Low Suction Pressure Cutout aids in protecting the evaporator from damage due to ice build up caused by operation at low refrigerant charge or restricted refrigerant flow. A number of transient timer features prevent nuisance trips during start-up, compressor loading, etc. The Low Suction Pressure Safety is programmable (see Section 8.2 / Page 130, Low Suction Pressure Cutout for more details).

The suction pressure cut-out is ignored for the first 45 seconds of operation. During the next 180 seconds of running , suction pressure may be lower than the cut-out, but must be greater than:

$$\text{SP Cutout} = \frac{\text{Programmed Cutout} * (\text{run Time} - 25)}{25}$$

This cutout value increases with time until after 225 seconds it equals the programmed cutout value. If suction pressure falls below the calculated cutout value before 225 seconds of run time, the system will be shut down.

The following graph shows a typical programmed suction pressure cutout of 44 PSIG (3 bar) and its change from time = 0 sec of compressor run time to 225 seconds of compressor run time.

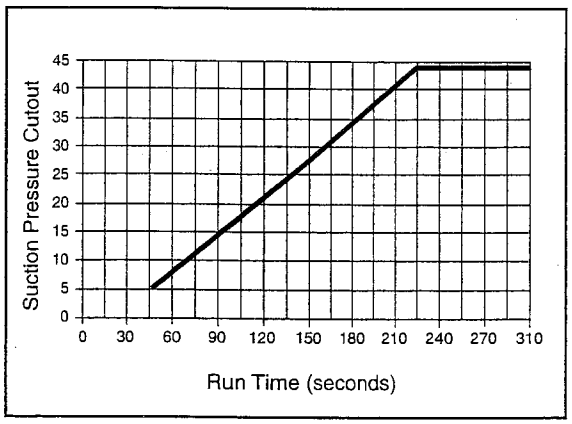

LD03525

Suction Pressure Cutout With 44 PSIG Programmed Cutout

FIG. 45 – SUCTION PRESSURE CUTOUT

After 225 seconds of operation with suction pressure operating above the cut-out, a 30 second transient timer prevents short term fluctuations in suction pressure due to loading or fan cycling from causing shutdown. If suction pressure drops below the cutout point after 225 seconds of operation, the transient timer is activated. While the transient timer is active, suction pressure must not drop below 10% of the cut-out initially programmed and must be greater than:

$$\text{C.O.} = \frac{\text{Programmed C.O.} \times (\text{Time} + .1)}{33.3}$$

This transient cutout value increases with time until after 30 seconds it equals the programmed cutout value. If the suction pressure falls below the value as calculated by the formula relative to time, the system will shut down on a low suction pressure fault. If the suction pressure rises above the programmed cutout value, the 30 second timer will be reset.

If the Dip Switch on the microprocessor board is set for "Water Cooling" (see page 113), the cutout is programmable between 44 - 70 PSIG (3-5 bar) for both R-22 and R407c models. In this mode, settings of 44 PSIG (3 bar) for R22 and R407c are recommended. If the Switch is set for "Brine Cooling" (glycol) the cutout is programmable between 5 - 70 PSIG (0.3 - 5 bar) for R-22 and R407c models. In this mode, the cutout should typically be set to the saturated refrigerant pressure equivalent to 18°F (10°C) below the temperature of the chilled liquid. NOTE: The sludge point of the glycol MUST be at least 20°F (11°C) below the equivalent cutout temperature. This programmable value is password protected.

High Compressor Motor Current Cutout :

SYS # HIGH MTR CURR
SYS # HIGH MTR CURR

The High Motor Current Safety protects against excessively high motor current and shuts a system down and locks it out after only a single occurrence of a rise in average motor current above the cutout point. Motor current is monitored using 3 Current Transformers (CTs) per motor, one on each phase.

Average motor current is monitored after 7 seconds of compressor operation. The system will be shut down if average motor current exceeds 115% FLA.

NOTE: FLA (full load amps) is approximately 1.2 x RLA (rated load amps). RLA is specified on the motor / chiller nameplate and is typical current demand under rated operating conditions in a fully loaded system. When a system is fully loaded, typical motor currents may be at 60 - 85% FLA depending on operating conditions.

Low Motor Current Cutout / Motor Protector (Hi Motor Winding Temp Cutout) / Mechanical High Pressure Cutout / External Motor Overload:

```
SYS # LOW CURR / MP / HP
SYS # LOW CURR / MP / HP
```

The **Low Motor Current Safety prevents** a compressor motor running with less current than would normally be expected. This may result from loss of refrigerant, contactor, or power problems as well as from a compressor that is not pumping due to a mechanical malfunction. Motor current is monitored using 3 Current Transformers (CTs) per motor, one on each phase.

Average motor current is monitored after 3 seconds of compressor operation. From this time the system will be shut down if average motor current is less than 10% of FLA.

Compressor Motor Protection Modules, External Motor Overloads and Mechanical High Pressure Cutouts are fitted to each system. All these devices stop the compressor by removing power from its motor contactor coils. This causes the CT's to obviously sense a zero current draw by the compressor motor and causes a Low Motor Current Fault to be displayed. These devices operate as follows :

The **Motor Protection Module** protects against excessive motor winding temperature by monitoring 3 or 6 sensors built into the motor windings. If the temperature becomes excessive, the module will cause power to be removed from the compressor contactors shutting down the compressor. Auto restart will not occur since manual reset is required. A fault lockout will automatically occur after the micro attempts 2 more starts with the MP contacts open. Manual reset is accomplished by removing 115VAC control power from the micro panel after the motor sensors have sufficient time to cool. Details relating to operation of the Motor Protection Module can be found on page 16.

The **External Motor Overload** is responsive to motor current. When the overload relay senses single phase operation, locked rotor current in excess of 10 seconds, or sustained current overloads in excess of 140% of RLA, it will trip. This causes power to be removed from the compressor contactors and shuts down the compressor.

Auto-restart will not be permitted since a manual reset of the device is required to restart the compressor. After the first fault, the micro will try two more restarts, but with the External Motor Overload Relay tripped, no restart can occur. The micro will then lock out the system. In addition to manually resetting the External Motor Overload Relay, the fault will also require reset by turning the appropriate system switch OFF, then ON.

The OL relay setting should never be altered. If for some reason the Overload Relay is replaced, the following procedure is used for setup.

A/L Start:	Dial Setting = (1.1 x RLA) / 350
WYE-Delta Start:	Dial Setting = (0.64 x RLA) / 350

The **Mechanical High Pressure Cutout** protects against excessive refrigerant discharge pressure and is set to 405 PSIG (28 bar). Auto-restart will be permitted after shutdown on discharge pressure, when the pressure drops below 330 PSIG (23 bar) and the cutout contacts close. A fault lockout will result if safety thresholds are exceeded three times in a 90 minute period.

Low Evaporator Temperature Cutout (R407c Only):

```
SYS 1 LOW EVAP TEMP
SYS 2 LOW EVAP TEMP
```

The Low Evaporator Temperature Cutout is to protect the evaporator from freeze-up with R-407c. This safety uses the Cooler Inlet Refrigerant Temp Sensors to monitor evaporator inlet refrigerant temperature on each system. These sensors are only installed on R-407c units. If the refrigerant temperature falls below 21°F (-6°C) in water cooling mode, the system will be shut down. If the refrigerant temp falls 19°F (11°C) below the leaving chilled liquid temp in glycol cooling mode, the system will shut down. Also, if the cooler inlet refrigerant temp sensor reads out of range low, the system will also shut down.

2.7 PRINTOUT ON FAULT SHUTDOWN

If an optional printer is installed, the contents of History Buffer 1 will be sent to the printer any time a fault shutdown occurs. This will allow record keeping of individual faults, even if they do not cause a lockout of the system. This information may be useful to identify developing problems and troubleshooting.

The No Run Permissive fault messages will not be stored in the History Buffer and will not cause an auto printout.

NOTE: Due to extreme operating conditions or systems where control deficiencies are present, occasional faults may occur with the corresponding automatic printout. This is not a cause for concern.

3. DISPLAY KEYS & OPTION SWITCHES

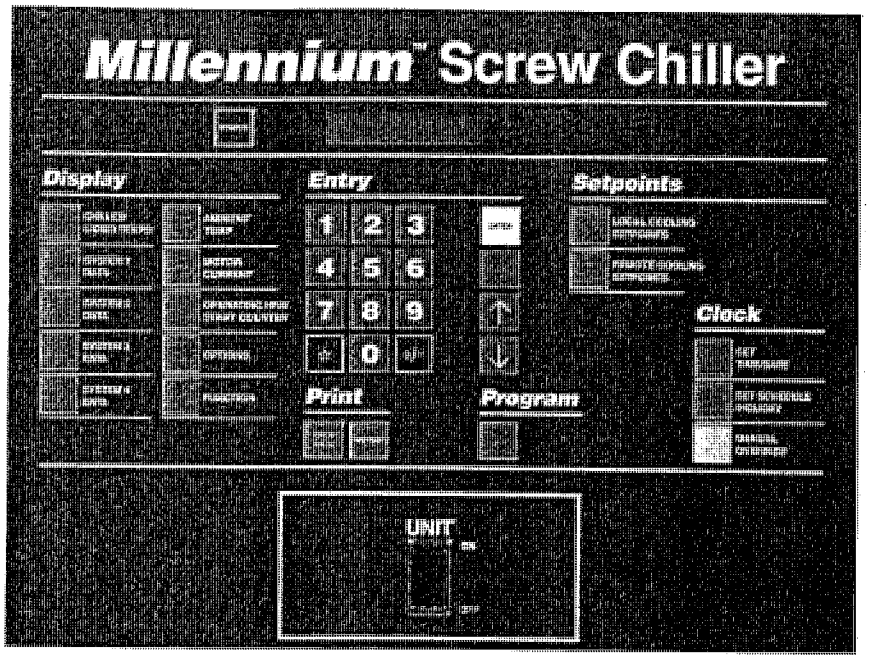

29023A

3.1 GENERAL

The Display keys provide direct access to retrieve commonly required data about the operation of the chiller. This is particularly useful during commissioning, monitoring the operation of the chiller, diagnosing potential future problems and service troubleshooting.

When a Display key is pressed, the corresponding message will be displayed and will remain on the display until another key is pressed.

Displayed data is in "real-time" and is updated approximately every 2 seconds. If updating of one of the messages is required faster than every 2 seconds, the appropriate key for the desired display can be pushed and held to provide updating every 0.4 seconds.

Display Messages may show characters indicating "greater than" (>) or "less than" (<). These characters indicate the actual values are greater than or less than the values which are being displayed, but are outside the ability of the micro to give an actual reading. This is unlikely to occur unless a problem exists in the measuring sensors or during extreme conditions.

The Display keys and the data available from each is as follows :

3.2 CHILLED LIQUID TEMPS KEY

When the Chilled Liquid Temperatures key is pressed a display of chilled liquid temperatures leaving the chiller (LCHLT) and returning to the chiller (RCHLT) is provided as follows :

```
LCHLT = 44.2 ° F
RCHLT = 54.0 ° F
```

If the key is pressed again, the following message will appear if an optional mixed chilled leaving temp sensor is installed for multi unit sequencing. If a sensor is not installed, pressing the key will have no effect.

```
MCHLT = 43.8 ° F
```

3.3 SYSTEM # DATA KEYS

Pressing one of the System # Data keys a number of times scrolls through displays of differential oil pressure (OIL), suction pressure (SP) and discharge pressure (DP), oil temperature, suction temperature (ST), discharge temperature (DT), saturated suction temperature, suction superheat, saturated discharge temperature, discharge superheat and compressor slide valve position.

Examples of these displays are as follows where # is the appropriate system number :

```
SYS # OIL=    5 PSIG
SP= 64 DP= 195 PSIG
```

```
SYS # OIL = 157.4°F
ST= 31.0 DT= 123.2°F
```

```
S# SAT SUCT = 32.9°F
SUCT SHEAT  = 15.0°F
```

```
S# SAT DSCH=130.0°F
DSCH SHEAT  = 54.3°F
```

```
SYS # S V STEP = 3
```

```
SYS # COOLER INLET
REFRIG TEMP= 28.2°F
```

NOTE: The Cooler Inlet Temp. display will only appear if the chiller is selected for R-407c.

Temperatures and pressures are either measured directly by transducers and temperature sensors, or computed from these measurements as follows :

Differential oil pressure is the pressure difference between oil leaving the discharge oil separator and oil pressure reaching the compressor. It is computed by subtracting oil pressure measured after the oil line filter from discharge pressure (oil in the oil separator is at discharge pressure.). Typically for a clean oil filter the drop will be 2 - 10 PSID (0.1 to 0.7 bar) but may reach up to 40 PSID (3 bar).

Saturated discharge and suction temperatures are computed by converting measured pressure to temperature.

Slide Valve Position is computed based on the number of loading steps that the micro has sent to the slide valve solenoid in the form of a current signal.

*NOTE: Slide valve position is **approximate** and should be used for reference only. Under many conditions, it will be fully loaded between step 60 -75 and fully unloaded between step 0 -40.*

Superheats are the difference between the respective saturated temperature (converted from pressure) and the actual. Display Limits for the System Pressures and Temperatures displays are as follows:

	MIN. LIMIT		MAX. LIMIT	
Oil Pressure	208 psid	(14 bar)	0 psid	(0 bar)
Suction Pressure	0 psig	(0 bar)	199 psig	(14 bar)
Discharge Pressure	0 psig	(0 bar)	399 psig	(28 bar)
Suction Temp.	*9.0 °F	(-13°C)	84.2 °F	(29°C)
Discharge Temp.	40.3 °F	(5°C)	302.6 °F	(150°C)
Oil Temp.	40.3 °F	(5°C)	240.0 °F	(116°C)
Sat. Discharge Temp.	-41.0 °F	(-41°C)	140.5 °F	(60°C)
Sat. Suction Temp.	-41.0 °F	(-41°C)	101.3 °F	(39°C)
Slide Valve Position	0 %	(0%)	100%	(100%)
Suction Superheat	*-81.5 °F	(-63%)	60.9 °F	(16°C)

NOTE: Minimum and maximum values may change as software (EPROM) revisions are made.

NOTE: Below 9.0°F (13°C), the Suction Temp. display will disappear. This will in turn cause the Superheat display to disappear.

3.4 AMBIENT TEMP KEY

When the Ambient Temperature key is pressed, ambient air temperature, as measured surrounding the chiller, is displayed.

```
AMBIENT AIR TEMP
= 71.9 °F
```

Display Limits:	Minimum	-4.6°F	(-20.3°C)
	Maximum	137.9°F	(58.8°C)

3.5 MOTOR CURRENT KEY

Pressing the Motor Current key displays compressor current for each system:

```
COMP 1 = 63 AMP 85%FLA
COMP 2 = 30 AMP 41%FLA
```

This display shows the average motor current in amps and average compressor motor current as a percentage of FLA. All values are approximate. Keep in mind that current in "amps" is an "approximate" value.

```
ISN CRNT LIMIT: NONE
EMS CRNT LIMIT: NONE
```

On the second press of the of the Motor Current Key, the current limit values as set by the ISN (Remote BAS System) and EMS-PWM current limiting input are displayed, if they are active. See Sections 1.10, 2.4 and 3.5 for more details.

3.6 OPERATING HRS / START COUNTER KEY

When the Operating Hours / Starts Counter key is pressed, the accumulated running hours and starts for System 1 and 2 compressors are displayed. Where applicable, pressing the key again displays the values for Systems 3 and 4 on larger models:

```
HRS 1 = 1143.2 = 1382
STR 1 =  285.2 =  322
```

```
HRS 3 = 1255.4 = 1095
STR 3 =  365.4 =  455
```

Display Limits : Maximum run hours 99,999
Maximum starts 99,999

Values roll over to zero, if the maximum limit is exceeded.

NOTE: These counters are zeroed at the factory, but may indicate run time and number of starts logged during factory testing prior to shipment.

3.7 OPTIONS KEY & DIP SWITCH SETTINGS

The Options key provides a display of options which are programmed by the positions of the S1 Dip Switches on the Microprocessor Board. Proper programming of the switches is important during the commissioning of the chiller. The Options key can be used to verify the Dip Switch positions without looking at or handling the Microprocessor Board.

Each press of the key will scroll to the next option/dip switch setting.

Three Option Switch Messages (S1-1 to S1-3) will then be displayed in sequence. At the end of the sequence, the display will automatically revert to the first Option Switch message.

The following is a detailed guide to programming the Dip Switches together with the associated display message provided for each selection when the Options key is pressed:

SWITCH 1 : Water / Brine Cooling

Open:

```
S1-1 CHILLED LIQUID
     WATER
```

Water Cooling Mode is for water cooling applications and allows the chilled liquid leaving temperature setpoint to be programmed from 40 to 70 °F (4 to 21°C). Selecting this mode also auto-programs the Low Chilled Liquid Cut-Out at 36°F (2°C) and the Suction Pressure Cut-Out at 44 PSIG (3 bar).

Closed:

```
S1-1 CHILLED LIQUID
     GLYCOL
```

Brine Cooling Mode is for brine/glycol applications with setpoints below 40°F (4°C) and allows the chilled liquid leaving temperature setpoint to be programmed from 10 to 70°F (-12 - 21°C). In this mode, the Low Chilled Liquid Cut-Out can be programmed from 8 to 36° F (-13 to 2°C) and the Suction Pressure Cut-Out programmed from 20 to 70 PSIG (1 to 5 bar) for R-22 models and 5 to 70 PSIG (0.3 to 5 bar) for R-407c models.

SWITCH 2 : Ambient Temp. Low Limit

Open:

```
S1-2 AMBIENT CONTROL
     STANDARD
```

Standard Ambient Mode auto-programs the Low Ambient Cutout setting at 25°F (-4°C) and is not adjustable.

Closed:

```
S1-2 AMBIENT CONTROL
     LOW AMBIENT
```

Low Ambient Mode allows the Low Ambient Cut-Out to be programmed from 0 to 50 °F (-18 to 10°C). Values above 25°F (-4°C) can be used to automatically shut down the chiller when direct cooling methods become operational.

SWITCH 3 : Refrigerant

Open:

```
S1-3 REFRIGERANT
     R-407C
```

The R-407C Mode MUST be selected for models using refrigerant R-407C. Incorrect selection of this switch may cause serious damage to the chiller.

Closed:

```
S1-3 REFRIGERANT
     R-22
```

The R-22 Mode MUST be selected for models using refrigerant type R-22. Incorrect selection of this switch may cause serious damage to the chiller.

Dip Switch Physical Location and Setting

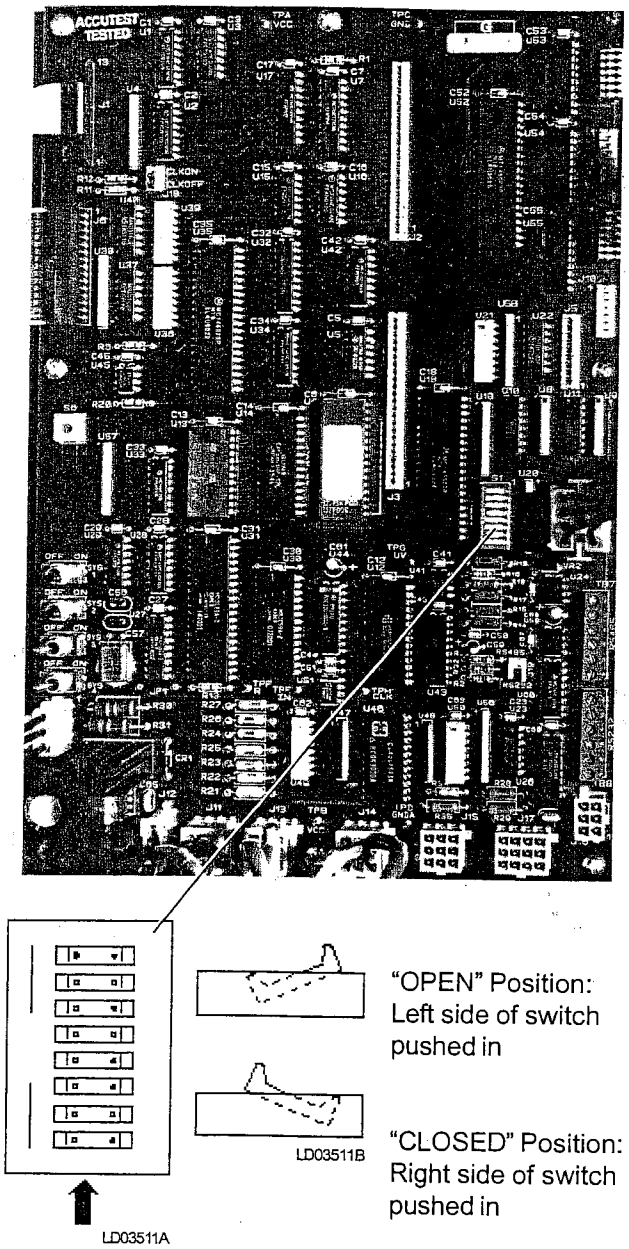

FIG. 46 – ENLARGED PHOTOGRAPH OF DIP SWITCHES ON MICROPROCESSOR BOARD

Summary of Settings

The following table gives a summary of Modes (displayed messages) which can be selected using the Open and Closed positions for each of the eight SW1 Dip Switches

SWITCH	SWITCH "OPEN" SETTING	SWITCH "CLOSED" SETTING
1	Water Cooling	Brine Cooling
2	Standard Ambient Control	Low Ambient Control
3	Refrigerant R-407C	Refrigerant R-22
4	Spare	Spare
5	Spare	Spare
6	Spare	Spare
7	Spare	Spare
8	Spare	Spare

3.8 FUNCTION KEY

Pressing the Function key only displays the same message as pressing the Status key. Pressing the Function key followed by another display key will scroll through all the data available under that key once. E.g., pressing the Function key followed by the System 1 Data key will result in scrolling through the 5 displays shown in Section 3.3 without the need to press the System 1 Data key to scroll to the next display. After scrolling through the data, the display returns to the status message.

The following keys can be scrolled using the Function Key: Chilled Liquid Temps, System # Data, Motor Current and Options.

4. PRINT KEYS

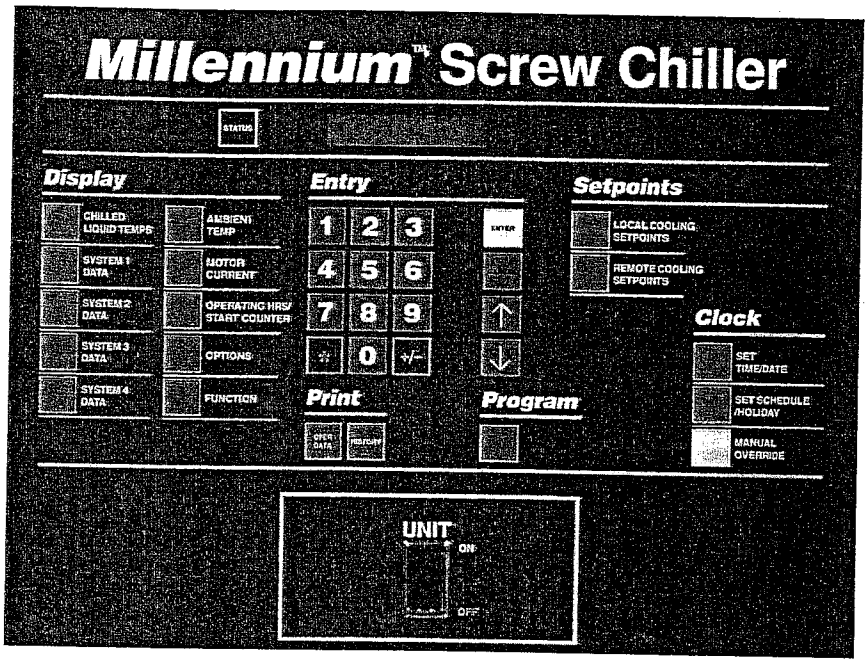

29023A

4.1 GENERAL

The Print keys provide access to two sets of information either locally on the panel display or, if an optional printer is connected, remotely as hard copy printouts.

The Operating Data (Oper Data) key provides a real-time list of system operating data and programmed settings. The History key provides a comprehensive list of operating data and programmed settings "at the instant of fault" on each of the last six faults (local display) or three faults (remote printout) which occurred on the chiller.

4.2 OPER DATA KEY

If a remote printer is not connected, pressing the Operating Data key allows the user to scroll through information, on the 40 character display, which is not directly available from the Display keys on the panel.

If a remote printer is connected, pressing the Operating Data key causes a snapshot to be taken of system operating conditions and of the user programming selections. The data is stored in temporary memory, then transmitted from the microprocessor to the remote printer. As the data is transmitted it is erased from the memory.

Information available using the Operating Data key is described in the following sections. In example displays " # " is used to indicate system number where appropriate.

4.3 OPERATING DATA - LOCAL DISPLAY MESSAGES

YCAS 2 SYSTEM MODELS :

When the Operating Data key is pressed, the following message appears :

```
OPERATING DATA
DISPLAYS
```

Repetitively pressing the ↑↓ keys will scroll through the following Common (whole chiller) Data and individual System Data information displays.

Common Data :

```
LOAD TIMER      10 SEC
UNLOAD TIMER     0 SEC
```

This message shows the time remaining on the Load Timer and the Unload Timer. These Timers constantly recycle and are used in conjunction with "rate control" and "temperature deviation from setpoint" to determine when loading should occur.

```
TEMP ERROR  00.5 °F
TEMP RATE - 0.9 °F/M
```

The upper message gives the difference (error) between actual leaving chilled liquid temperature and the programmed Target temperature. The lower message gives the rate of change of the chilled liquid leaving temperature in degrees per minute. A minus sign (-) indicates falling temperature. No sign indicates rising temperature.

```
LEAD SYSTEM IS
SYSTEM NUMBER      #
```

This message advises which system is programmed as the lead.

```
EVAP PUMP IS      OFF
EVAP HEATER IS     ON
```

This message indicates the position of the optional auxiliary contacts for the evaporator water pump and the status of the evaporator heater.

For the evaporator pump contacts, ON = contacts closed, OFF = contacts open.

The Evaporator Heater status is controlled on ambient temperature as follows : If measured ambient falls below 40°F (4°C) the Evaporator Heater is switched ON. If measured ambient then rises above 45°F (7°C) the heater is switched OFF. The evaporator heater prevents water standing in the evaporator from freezing.

```
ACTIVE REMOTE CTRL
        NONE
```

This message indicates that a remote device such as a Remote Control Center, an ISN controller, or another device sending a PWM signal for temperature or current reset is overriding control points programmed through the keypad or default microprocessor setpoints. The following displays may be encountered:

NONE	–	No remote control active. Remote monitoring may be active.
ISN	–	YorkTalk via ISN or Remote Control Center (remote mode).
PWM CURR	–	EMS PWM Current Limiting Enabled
PWM TEMP	–	EMS PWM Temp. Reset Enabled
CUR/TEMP	–	EMS PWM Current Limiting & Temperature Reset Enabled

System Data:

The following sequence of three displays are provided first for System 1, then for System 2, and then for Systems 3 and 4 as applicable.

```
SYS # RUN TIME
  1 - 3-48-17 D-H-M-S
```

This message displays the accumulated Run Time since the last start in Days (D), Hours (H), Minutes (M), and Seconds (S).

```
SYS # LLSV IS      ON
ECON TXV SOL IS    ON
```

This message indicates the Liquid Line Solenoid Valve and the economizer TXV solenoid valve position: ON = Energized/Open, OFF = De-energized/Closed.

```
SYS # FAN STAGE     3
COMP HEATER IS     ON
```

This message advises the stage of condenser fan operation on this system and the status of the compressor heater. See Section 8.4 for details of fan staging.

Once the System Data sequence has been repeated for the second system, pressing the ↑ or ↓ key again will loop back to the beginning to the Load/Unload Timer display. To leave the sequence at any point press a key from another section of the keypad.

NOTE: Pressing the " * " at any time while in the OPER DATA mode displays the EPROM software version being used, as shown below:

```
SOFTWARE VERSION
  C.A14.10.01
```

YCAS 3 SYSTEM MODELS:

YCAS 3 System Models are constructed in two sections. One section contains number 1 and 2 refrigerant systems plus the common three circuit evaporator. The second section contains the number 3 refrigerant system. Both systems have their own control panel, but only the System 1 and 2 panel is fitted with a keypad and display.

The Local and System Data display messages for the YCAS 3 System models follow the same format as the YCAS 2 System Model messages as given in the preceding paragraphs. The only difference is that after the System 2 data is completed, pressing the key displays System 3 data before looping back to the Load/Unload Timer Display.

YDAS MODELS:

YDAS models are constructed in two sections. One section contains number 1 and 2 refrigerant systems plus their associated evaporator. The second section contains

the number 3 and 4 refrigerant systems plus their associated evaporator. Both sections have their own control panel, but only the System 1 and 2 panel is fitted with a keypad and display.

The Local and System Data display messages for the YDAS models follow the same format as the YCAS 2 System model messages as given in the preceding paragraphs. The only difference is that after the System 2 Data is completed, pressing the ↑ key displays System 3 and System 4 data before looping back to the Load/Unload Timer Display.

4.4 OPERATING DATA - REMOTE PRINTOUT

The follow text shows a typical example printout obtained by pressing the Operating Data key with an optional printer attached. In this case an example is shown for a YCAS 2 System Chiller. YCAS 3 System models and YDAS 4 System models provide similar printouts for the appropriate number of systems :

```
YORK INTERNATIONAL CORPORATION
MILLENNIUM SCREW CHILLER

UNIT STATUS
2:04PM 10 OCT 98

SYS 1        NO COOLING LOAD
SYS 2       COMPRESSOR RUNNING

OPTIONS

CHILLED LIQUID          WATER
AMBIENT CONTROL        STANDARD
REFRIGERANT TYPE         R-22

PROGRAM VALUES

DSCH PRESS CUTOUT      399 PSIG
DSCH PRESS UNLOAD      375 PSIG
SUCT PRESS CUTOUT      44 PSIG
HIGH AMBIENT CUTOUT   130.0 DEGF
LOW AMBIENT CUTOUT     25.0 DEGF
LEAVING LIQUID CUTOUT 36.0 DEGF
MOTOR CURRENT UNLOAD   100 %FLA
ANTI RECYCLE TIME      600 SECS
LOCAL/REMOTE MODE       REMOTE
LEAD/LAG CONTROL       AUTOMATIC

UNIT DATA

LEAVING LIQUID TEMP   49.0 DEGF
RETURN LIQUID TEMP    58.2 DEGF
MIXED LIQUID TEMP    51.3 DEGF
COOLING RANGE 42.0 +/- 2.0 DEGF
AMBIENT AIR TEMP      74.8 DEGF
LEAD SYSTEM          SYS 2
EVAPORATOR PUMP          ON
EVAPORATOR HEATER        OFF
ACTIVE REMOTE CONTROL      NONE
SOFTWARE VERSION     C.ACS.09.00
```

```
SYSTEM 1 DATA

COMPRESSORS STATUS         OFF
RUN TIME     0- 0- 0- 0 D-H-M-S
MOTOR CURRENT   0 AMPS   0 %FLA
SUCTION PRESSURE      125 PSIG
DISCHARGE PRESSURE    131 PSIG
OIL PRESSURE        130 PSIG
SUCTION TEMPERATURE   68.4 DEGF
DISCHARGE TEMPERATURE 68.8 DEGF
OIL TEMPERATURE      68.8 DEGF
SAT SUCTION TEMP      71.8 DEGF
SUCTION SUPERHEAT      3.4 DEGF
SAT DISCHARGE TEMP    74.5 DEGF
DISCHARGE SUPERHEAT    6.3 DEGF
SLIDE VALVE STEP         0
COOLER INLET REFRIG   44.6 DEGF
LIQUID LINE SOLENOID       OFF
ECONOMIZER TXV SOLENOID    OFF
CONDENSER FAN STAGE       OFF
COMPRESSOR HEATER         ON
WYE-DELTA RELAY         OFF

SYSTEM 2 DATA

COMPRESSORS STATUS         ON
RUN TIME     0- 0-15-26 D-H-M-S
MOTOR CURRENT 104 AMPS 87 %FLA
SUCTION PRESSURE       57 PSIG
DISCHARGE PRESSURE    233 PSIG
OIL PRESSURE        218 PSIG
SUCTION TEMPERATURE   42.9 DEGF
DISCHARGE TEMPERATURE 145.5 DEGF
OIL TEMPERATURE      102.8 DEGF
SAT SUCTION TEMP      31.7 DEGF
SUCTION SUPERHEAT     11.2 DEGF
SAT DISCHARGE TEMP   112.1 DEGF
DISCHARGE SUPERHEAT   33.4 DEGF
SLIDE VALVE STEP         70
COOLER INLET REFRIG   23.6 DEGF
LIQUID LINE SOLENOID       ON
ECONOMIZER TXV SOLENOID      ON
CONDENSER FAN STAGE        3
COMPRESSOR HEATER         OFF
WYE-DELTA RELAY           ON

DAILY SCHEDULE

S M T W T F S   *=HOLIDAY
MON START=00:00AM   STOP=00:00AM
TUE START=00:00AM   STOP=00:00AM
WED START=00:00AM   STOP=00:00AM
THU START=00:00AM   STOP=00:00AM
FRI START=00:00AM   STOP=00:00AM
SAT START=00:00AM   STOP=00:00AM
HOL START=00:00AM   STOP=00:00AM
```

NOTE: The System Cooler Inlet Refrigerant Temperature will be printed if the unit is in R-407c mode.

4.5 HISTORY KEY

If a safety shutdown occurs on the chiller, a comprehensive list of operating and programmed settings data is stored by the microprocessor. The information is stored at the instant of the fault, regardless of whether the fault caused a lockout to occur. This information is not affected by power failures or manual resetting of a fault lockout.

The microprocessor stores data for up to 6 safety shutdowns on 2 System units and 4 safety shutdowns on 3 or 4 compressor units. Once this limit is reached, a further shutdown will cause the oldest set of data to be discarded in favor of storing the new shutdown data. The Safety Shutdowns are numbered from 1 to 6 with number 1 always being the most recent.

If a remote printer is not connected, pressing the History key allows the operator to locally scroll through information relating to the stored safety shutdowns on the control panel display.

If a remote printer is connected, pressing the History key will cause data from the last 6 shutdowns on a 2 compressor chiller or 4 shutdowns on a 3 or 4 compressor chiller to be transmitted from the microprocessor to the remote printer. The printout will begin with the most recent fault which occurred. This does not affect the stored data and as many prints as desired may be taken. See Section 4.7 for a HISTORY printout sample.

4.6 FAULT HISTORY DATA - LOCAL DISPLAY MESSAGES

YCAS 2 SYSTEM MODELS :

When the History key is pressed, the following message will appear:

```
DISPLAY SAFETY SHUT-
DOWN NO.1 (1 TO 6)
```

To select a Safety Shutdown, press the appropriate key on the numeric key pad then press Enter. Remember that the most recent fault information is stored as shutdown No. 1. After the ENTER Key is pressed, a message indicating the time and date of the Fault Shutdown will appear.

```
SHUTDOWN OCCURRED
5:59AM 29 NOV 98
```

Repetitively pressing the ↑↓ Keys allows scrolling through the information available in the Safety Shutdown buffer. This is divided into Common (Whole Chiller) Data and Individual System Data displays as follows:

Common Data :

```
SYS 1 NO FAULTS
SYS 2 HIGH MTR CURR
```

This message indicates the fault that caused the shutdown; in this case, a high motor current in System 2 was the cause of the shutdown.

```
S1-1 CHILLED LIQUID
WATER
```

This message displays the type of chilled liquid selected (water or glycol) at the time of the fault.

```
S1-2 AMBIENT CONTROL
LOW AMBIENT
```

This display indicates whether standard or low ambient operation was selected at the time of the fault.

```
S1-3 REFRIGERANT
R-22
```

This message indicates the type of refrigerant that was programmed at the time of the fault (R-22 or R-407C).

```
DISCHARGE PRESSURE
CUTOUT = 395.0 PSIG
```

This message indicates the discharge pressure cut-out programmed at the time of the fault.

```
DISCHARGE PRESSURE
UNLOAD = 375.0 PSIG
```

This display provides the discharge pressure unload point, programmed at the time of the fault.

```
SUCTION PRESSURE
CUTOUT = 44.0 PSIG
```

This message displays the suction pressure cut-out programmed at the time of the fault.

```
HIGH AMBIENT TEMP
CUTOUT = 130.0 °F
```

This message indicates the High Ambient Temperature Cutout at the time of the fault.

```
LOW AMBIENT TEMP
CUTOUT = 25.0 °F
```

This display shows the Low Ambient Cutout programmed at the time of the fault.

```
LEAVING LIQUID TEMP
CUTOUT = 36.0°F
```

This display shows the Low Leaving Chilled Liquid Cut-out programmed at the time of the fault.

```
HIGH MOTOR CURRENT
UNLOAD - 100% FLA
```

This message shows the programmed %FLA Motor Current Unload at the time of the fault.

```
LOCAL/REMOTE MODE
LOCAL
```

This message shows whether remote or local communications was selected at the time of the fault.

```
LEAD/LAG CONTROL
AUTOMATIC
```

This message displays the lead/lag selection programmed at the time of the fault.

```
LCHLT = 44.1 °F
RCHLT = 52.9 °F
```

This message indicates the leaving and return chilled liquid temperature at the time of the fault.

```
MCHLT = 43.8 °F
```

This message indicates the mixed water temperature at the time of the fault. A mixed water sensor may be present when multi-unit sequencing is utilized. If no mixed water temperature sensor is installed, the display will not appear.

```
SETPOINT = 44.0°F
RANGE = +/- 2.0°F
```

This message displays the programmed chilled liquid setpoint and deviation (control range) programmed at the time of the fault.

```
AMBIENT AIR TEMP
77.6°F
```

This message indicates the outdoor Ambient Air Temperature at the time of the fault.

```
LEAD SYSTEM IS
SYSTEM NUMBER 1
```

This message indicates which system was in the lead at the time of the fault.

```
EVAP PUMP IS ON
EVAP HEATER IS OFF
```

This message indicates the status of both the evaporator pump signal from the microprocessor and the evaporator heater.

```
ACTIVE REMOTE CTRL
NONE
```

This message indicates that a remote device such as a Remote Control Center, an ISN controller, or another device sending a PWM signal for temperature or current temperature or current reset is overriding control points programmed through the keypad or defualt microprocessor setpoints.

System Data :

Following the Common Data is a sequence of twenty information displays which are given twice, first for System 1, then for System 2. In each example, "#" is used to indicate System number :

```
SYS # COMPRESSOR
IS ON
```

This message indicates whether the compressor on this system was ON or OFF at the time of the fault.

```
SYS # RUN TIME
1-3-48-17 D-H-M-S
```

This message shows the Run Time logged on the system since the last compressor start, in Days (D), Hours (H), Minutes (M), and Seconds (S).

```
SYS # MOTOR CURRENT
78% FLA
```

This message indicates the compressor motor current in as a percentage of Full Load Amps.

```
SYS # OIL= 65 PSIG
SP= 62 DP= 271 PSIG
```

This message shows the system differential oil pressure at the time of the fault.

```
SYS # OIL= 154.8 °F
ST= 9.0 DT=123.7 °F
```

This message indicates the system oil line temperature at the time of the fault.

```
S# SAT SUCT =34.7°F
SUCT SHEAT =-6.5°F
```

These messages indicate compressor suction gas saturation temperature and superheat at the time of the fault.

```
S# SAT DSCH= 129 °F
DSCH SHEAT <-8.4°F
```

This message indicate compressor discharge gas saturation temperature and superheat at the time of the fault.

```
SYS # SV STEP = 40
```

This message indicates the compressor slide valve position at the time of the fault. 0 steps equals minimum capacity and 75 steps equals fully loaded.

```
SYS # COOLER INLET
REFRIG TEMP = 28.2°F
```

This message, which is only displayed if the unit is in R-407c mode, indicates the refrigerant temperature at the inlet of the cooler.

```
SYS # LLSV IS ON
ECON TXV SOL IS OFF
```

This message indicates the Liquid Line Solenoid Valve and the economizer Thermal Expansion Valve Solenoid Valve position: ON = Energized / OFF = De-Energized (OFF) at the time of the fault.

```
SYS # FAN STAGE 3
COMP HEATER IS OFF
```

This message indicates the stage of condenser fan operation on the system and the status of the compressor heater at the time of the fault. See Section 8.4 for details of fan staging.

YCAS 3 SYSTEM MODELS :

YCAS 3 System models are constructed in two sections. One section contains numbers 1 and 2 refrigerant systems plus the common 3 circuit evaporator. The second section contains number 3 refrigerant system. Both sections have their own control panel, but only the System 1 & 2 panel is fitted with a keypad and display.

When the History key is pressed, the following message will appear:

```
DISPLAY SAFETY SHUT-
DOWN NO.1 (1 TO 4)
```

To select a Safety Shutdown, press the appropriate key on the numeric key pad then press Enter. Remember that the most recent fault information is stored as shutdown No. 1.

Repetitively pressing the Enter key now scrolls through the information available in the Safety Shutdown buffer. The Safety Shutdown displays for the YCAS 3 System models have the same structure and sequence as the YCAS 2 System model messages as given in the preceding paragraphs. The only difference is that after the System 2 data is completed, pressing the ↑ key displays System 3 data before looping back to the start of the Safety Shutdown display.

YDAS MODELS :

YDAS models are constructed in two sections. One section contains numbers 1 and 2 refrigerant systems and the associated evaporator. The second section contains number 3 and 4 refrigerant systems and the associated evaporator. Both sections have their own control panel, but only the Section 1 and 2 panel is fitted with a keypad and display.

When the History key is pressed, the following message will appear:

```
DISPLAY SAFETY SHUT-
DOWN NO.1 (1 TO 4)
```

To select a Safety Shutdown, press the appropriate key on the numeric key pad then press Enter. Remember that the most recent fault information is stored as shutdown No. 1. Repetitively pressing the Enter key now scrolls through the information available in the Safety Shutdown buffer.

The Safety Shutdown displays for the YDAS Models have the same structure and sequence as the YCAS System 2 Model messages a sgiven in the preceding paragraphs. The only difference is that after the System 2 data is completed, pressing the ↑ key displays System 3 and System 4 data before looping back to the start of the Safety Shutdown display.

4.7 FAULT HISTORY DATA - REMOTE PRINTOUT

A printout history of unit and system operating conditions, at the time of the fault, can be obtained by pressing the HISTORY Key with an optional printer installed. 2 compressor chillers will provide a history printout on the last 6 faults and 3 & 4 compressor chillers will provide printouts on the last 4 faults. Printouts for 2, 3 and 4 compressor models will be similar.

An example of the HISTORY Printout is shown below:

```
YORK INTERNATIONAL CORPORATION
MILLENIUM SCREW CHILLER

SAFETY SHUTDOWN NUMBER 1
SHUTDOWN @ 3:56 PM 29 SEPT 98

SYS 1 HIGH DSCH PRESS SHUTDOWN
SYS 2              NO FAULTS

OPTIONS

CHILLED LIQUID        WATER
AMBIENT CONTROL      STANDARD
REFRIGERANT TYPE       R-22

PROGRAM VALUES

DSCH PRESS CUTOUT     399 PSIG
DSCH PRESS UNLOAD     375 PSIG
SUCT PRESS CUTOUT     44 PSIG
HIGH AMBIENT CUTOUT  130.0 DEGF
LOW AMBIENT CUTOUT    25.0 DEGF
LEAVING LIQUID CUTOUT 36.0 DEGF
MOTOR CURRENT UNLOAD  100 %FLA
ANTI RECYCLE TIME     600 SECS
LOCAL/REMOTE LEAD DATA  REMOTE
LEAD /LAG CONTROL   AUTOMATIC
UNIT DATA

LEAVING LIQUID TEMP  49.0 DEGF
RETURN LIQUID TEMP   58.2 DEGF
MIXED LIQUID TEMP   51.3 DEGF
COOLING RANGE 42.0 +/- 2.0 DEGF
AMBIENT AIR TEMP    74.8 DEGF
LEAD SYSTEM         SYS 2
EVAPORATOR PUMP        ON
EVAPORATOR HEATER      OFF
ACTIVE REMOTE CONTROL    NONE
SOFTWARE VERSION   C.ACS.09.00

SYSTEM 1 DATA

COMPRESSORS STATUS      OFF
RUN TIME   0- 0- 0- 0 D-H-M-S
MOTOR CURRENT  0 AMPS  0 %FLA
SUCTION PRESSURE    125 PSIG
DISCHARGE PRESSURE   131 PSIG
OIL PRESSURE       130 PSIG
SUCTION TEMPERATURE  68.4 DEGF
DISCHARGE TEMPERATURE 68.8 DEGF
OIL TEMPERATURE    68.8 DEGF
SAT SUCTION TEMP    71.8 DEGF
SUCTION SUPERHEAT    3.4 DEGF
SAT DISCHARGE TEMP   74.5 DEGF
DISCHARGE SUPERHEAT   6.3 DEGF
SLIDE VALVE STEP        0
COOLER INLET REFRIG  44.6 DEGF
LIQUID LINE SOLENOID     OFF
ECONOMIZER TXV SOLENOID   OFF
CONDENSER FAN STAGE     OFF
COMPRESSOR HEATER       ON
WYE-DELTA RELAY       OFF

SYSTEM 2 DATA

COMPRESSORS STATUS      ON
RUN TIME   0- 0-15-26 D-H-M-S
MOTOR CURRENT 104 AMPS 87 %FLA
SUCTION PRESSURE     57 PSIG
DISCHARGE PRESSURE   233 PSIG
OIL PRESSURE       218 PSIG
SUCTION TEMPERATURE  42.9 DEGF
DISCHARGE TEMPERATURE 145.5 DEGF
OIL TEMPERATURE    102.8 DEGF
SAT SUCTION TEMP    31.7 DEGF
SUCTION SUPERHEAT   11.2 DEGF
SAT DISCHARGE TEMP  112.1 DEGF
DISCHARGE SUPERHEAT  33.4 DEGF
SLIDE VALVE STEP       70
COOLER INLET REFRIG  23.6 DEGF
LIQUID LINE SOLENOID     ON
ECONOMIZER TXV SOLENOID    ON
CONDENSER FAN STAGE      3
COMPRESSOR HEATER      OFF
WYE-DELTA RELAY        ON

DAILY SCHEDULE

S M T W T F S  *=HOLIDAY
```

5. ENTRY KEYS

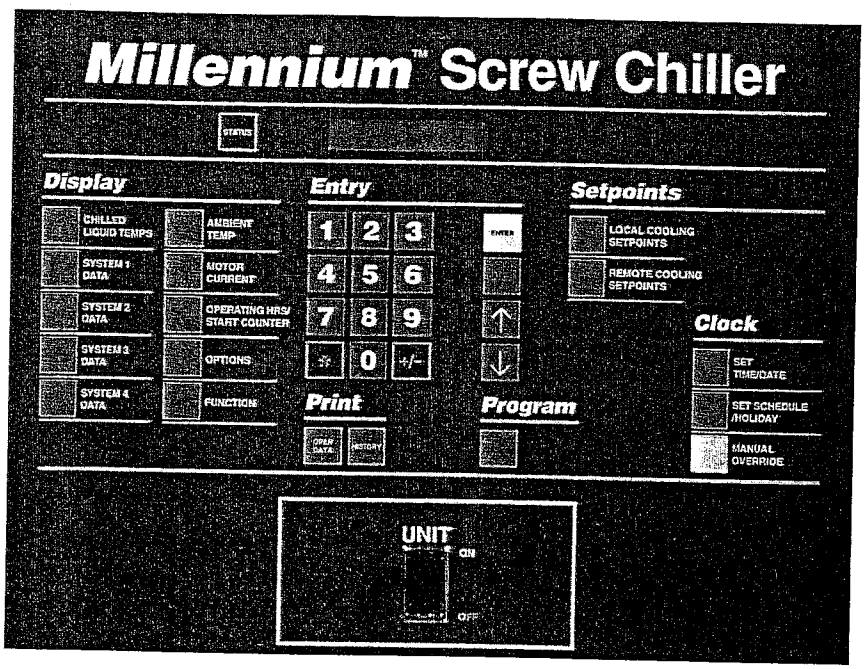

29023A

5.1 GENERAL

The Entry keys allow the user to change numerical values programmed in as chiller setpoints, cutouts, clock, etc.

5.2 NUMERICAL KEYPAD

The Numerical keypad provides all keys necessary to program numerical values into the micropanel.

The "*" key is used to designate holidays when programming special start/stop times for designated holidays in the SET SCHEDULE/HOLIDAY program mode.

The "+/-" key allows programming -C setpoints and cutouts in the metric display mode.

5.3 ENTER KEY

The Enter key must be pushed after any change is made to setpoints, cutouts, or system clock. Pressing this key tells the micro to accept new values into memory. If this is not done, the new values entered will be lost and the original values will be returned.

The Enter key is also used to scroll through available data when using the Program or Set Schedule/Holiday keys.

5.4 CANCEL KEY

When the Cancel key is pressed, the cursor will always return to the first character to be programmed in the display message. This allows the operator to begin reprogramming, if an error is made. When the Cancel key is pressed, the values already keyed in will be erased and the original or internally programmed default values will appear. In other instances the display will remain the same and the only reaction will be the cursor returning to the first character.

5.5 ↑↓ KEYS

The ↑↓ keys allow the user to scroll through data under the OPER DATA and HISTORY Key and to select the correct day of the week and the correct month when programming the micro with the correct time and date. The ↓ key also operates as a toggle AM/PM key if the cursor is over "AM" or "PM" on the display. For example, pressing the ↓ key when the cursor is on "PM" changes it to "AM".

6. SETPOINTS KEYS & CHILLED LIQUID CONTROL

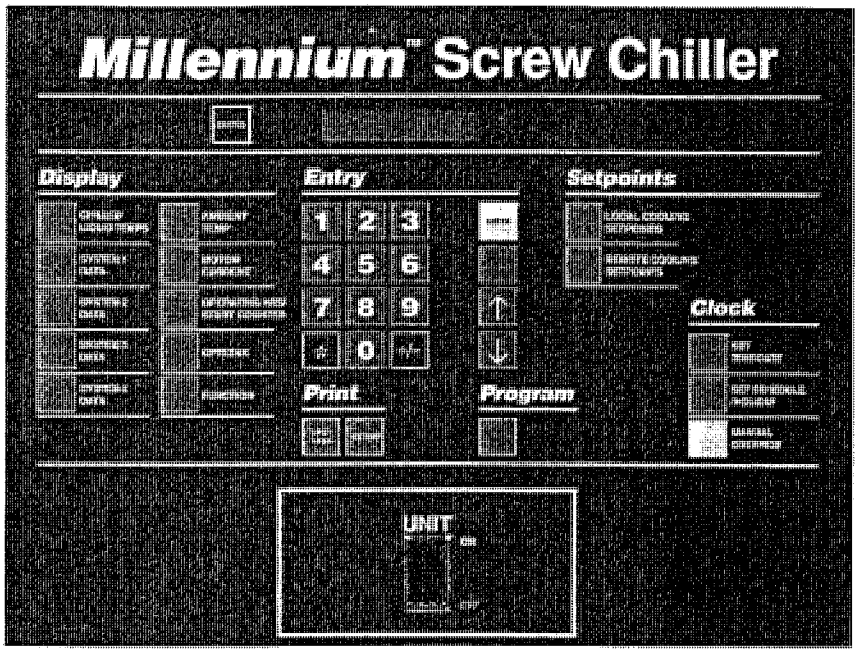

29023A

6.1 GENERAL

The microprocessor monitors leaving chilled liquid temperature and adjusts the chiller cooling capacity to maintain this temperature within a programmed range. The capacity is controlled by switching compressors on or off, and by varying a load/unload current to each compressor slide valve to adjust the capacity of the compressors. The microprocessor controls chilled liquid temperature through a combination of Fuzzy Logic control and internal timers. Fuzzy logic enables the micro to analyze the deviation from setpoint and the rate of change and determine the amount of loading and unloading necessary to control to the desired chilled liquid setpoint temperature. The micro also attempts to maximize efficiency by spreading the cooling load between compressors, minimize compressor cycling, and optimally utilize evaporator tube surface (maximize efficiency). This method of control is suitable for both water and brine cooling. Control setpoints can be programmed into the chiller to establish the desired range of leaving chilled liquid operating temperatures. A description of the operation and programming follows.

6.2 CHILLED LIQUID TEMPERATURE CONTROL

The Setpoints keys are used to program the required chilled water liquid temperature for the application. This is accomplished by programming the "Setpoint" and the acceptable deviation (+ or - Range) This deviation is simply called the "Range" and is best described as the maximum acceptable + and - deviation from Setpoint.

The minimum acceptable temperature is the Lower Range and is calculated by subtracting the "-" Range from the Setpoint. The Lower Range is the lowest acceptable leaving temperature. The highest acceptable temperature is referred to as the Upper Range and is calculated by adding the "+" Range to the Setpoint. The Upper Range is the highest acceptable leaving temperature. For example, if the desired Setpoint temperature is 44.0°F (7°C) and the allowable deviation (+ / - Range) from this temperature is +/- 2.0°F (1°C), then the micro will attempt to control leaving chilled liquid temperatures to 42.0°F (6°C) to 46.0°F (8°C). This can be viewed pictorially as follows :

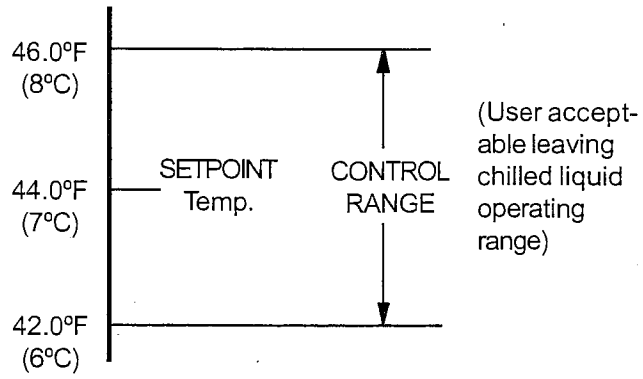

To assure that the chilled liquid leaving temperature stays within the Control Range, the micro will attempt to control the leaving temperature to the actual Setpoint temperature. This is accomplished by analyzing the temperature error and the rate of change to determine the

amount of loading necessary to cool the chilled liquid to the Setpoint Temperature. The amount of loading is varied by changing the amount of signal to the slide valve solenoid of each compressor.

Slide Valve Control

The slide valve of each compressor can be moved 75 steps, where "0" equals minimum capacity and fully loaded equals 75 steps. The amount of movement that occurs when the micro initiates changes may vary according to the error or deviation from setpoint and the rate of change of chilled liquid temperature. Each time a change is made, the incremental change may vary from 1 to 10 steps as determined from the micro. In cases where internal limiting is not in effect due to possible fault conditions, the micro will load the compressor with the lowest number of steps, alternating loading back and forth between compressors until both are fully loaded or unloaded.

In some cases the micro will be required to make decisions regarding loading under conditions where the "error" and "rate" conflict. For example, the micro may elect to unload a compressor if the error is "0" (temperature is at setpoint), while the rate of change of chilled liquid temperature is negative (falling). The micro may also elect to hold capacity when error is "+" (temperature is above setpoint) because the rate of change of chilled liquid is "-". Below is a chart which illustrates these conditions.

ERROR

RATE	Negative	Zero	Positive
Negative	Unload	Unload	Hold
Zero	Unload	Hold	Load
Positive	Hold	Load	Load

Load Timers

Fixed timers are set to minimize undershoot and overshoot as a result of slide valve control.

Load Timers are always set at 10 seconds between changes.

Unload timers are set at 5 seconds between changes.

Slide Valve Postion

A slide valve position (S V STEP), under the keypad system keys, of 75 indicates that the compressor is fully loaded. However due to the non-exact movement of the mechanism, a postion less than 75, possibly 60, could also mean that the compressor is fully loaded. Keep this potential indicator error in mind when attempting to determine slide valve position.

Compressor Starting & Loading Sequence For 2, 3, and 4 Compressor YCAS Chillers

If no compressors are running, the Daily Schedule permits, all safeties and run permissives are satisfied, the anti-recycle timers have timed out, and the leaving liquid temperature rises above the upper limit of the Control Range, the lead compressor will be started. A full current signal is sent to the compressor slide valve control solenoid to allow the internal spring to push the slide valve to a minimum loading position to assure it is fully unloaded at start. For the first 15 seconds of operation, or until pumpdown to cutout occurs, the liquid line solenoid valve will remain closed. After an initial period of 15 seconds, the micro will begin to load up the lead compressor to bring the chilled liquid temperature to setpoint.

After 5 minutes of run time, if Setpoint Temperature is not met, the micro will start the 1st lag compressor. This is not dependent on slide valve position which after 5 minutes will be fully loaded at a S V Step of "75". The lead compressor will be reduced in capacity to a slide valve step of 40. The lag compressor will then be loaded until it also reaches a slide valve step of 40 while the lead compressor is maintained at a constant load. At this point the compressors will be alternately loaded with loading always occuring on the compressor with the lowest slide valve step until the leaving chilled liquid is satified.

On 3 compressor chillers, if the two compressors cannot bring the load under control within 10 minutes, the micro will maintain the lead compressor fully loaded at S V Step 75, unload the first lag compressor to Step 40, and bring on the 2nd lag compressor. The second lag compressor will load until it reaches Step 40. From this point the compressors will be alternately loaded, always loading the compressor with the least step of loading first.

On 4 compressor chillers, loading will work the same as a 3 compressor chiller with another compressor added to the sequence. If the load cannot be brought under control in 15 minutes, the 3rd lag compressor (compressor 4) will be started. Before starting the 3rd lag compressor, the lead and 1st lag compressor will be maintained at full load(S V Step 75) and the 2nd lag compressor will be unloaded to S V Step 40. If load continues to rise, the 2nd and 3rd lag compressor will be alternately loaded until the leaving chilled liquid temperature is satisfied.

Compressor Loading

The micro loads and unloads individual compressors by varying current to the Slide Valve solenoid which controls oil flow to the slide valve. The slide valve load solenoid applies oil pressure to the slide valve which increases capacity. An internal spring moves the slide valve in the opposite direction to decrease capacity.

Whenever chilled liquid leaving temperature is above the Setpoint, loading current will increase to allow oil pressure to move the slide valve to increase capacity. Every 10 seconds, the micro will increment the slide valve step from 1 to 10 according to error (deviation from setpoint) and rate of change of chilled liquid.

The micro will always choose the compressor with the lowest slide valve position to load on increasing demand, provided the compressor is not pumping down, has run at least 15 seconds, and is not in a "Limiting" condition.

Loading Limiting

Load limiting will occur if a system safety threshold is neared. The anticipatory capability of the micro limits loading or unloads a system if the micro anticipates a safety threshold will be exceeded. Under circumstance where loading is required and one of the systems is nearing a threshold, the micro may elect to split the number of steps that it would normally load a compressor between more than one compressor. For instance, if system 1 were nearing its motor current unload point and it was scheduled to load, the micro could split a load signal of 10 steps between system 1 and 2. It could only load SYS 1 "2" steps while loading SYS 2 "8" Steps. Under these circumstances, the two systems will not appear to equalize loading.

Compressor Unloading and Shutdown Sequence

On 2 System chillers, whenever temperature is below the Setpoint, unloading pulses will be sent to open the unloading port on the control solenoid to relieve oil pressure on the slide valve. This allows spring pressure to move the slide valve to decrease capacity. Every 5 seconds, the micro decrement the slide valve position by 1 -10 steps according to the error (deviation from Setpoint) and the rate of change of chilled liquid temperature.

Unloading will occur in the reverse sequence as loading. As load drops, the micro will unload the compressor with the high slide valve step until all compressor slide valves are at "0" At this point, the the last lag compressor will pump down and cycle off, if chilled liquid temperature drops below "Setpoint - Control Range/2". When a lag compressor cycles off, the micro will set the remaining running compressors at Slide Valve Positions of "10". As load continues to decrease, the lead compressor will be pumped down and cycled off if the chilled liquid temperature drops below "Setpoint - Control Range/2.

On 3 compressor chillers, the process is the same as for 2 compressor chillers except that when the minimum level of equalized loading is reached, the lead and first lag compressor are maintained at constant load and only the second lag compressor continues to unload. If the second lag compressor shuts down according to decreasing load and demand continues to fall, then the first lag compressor will begin to unload and if necessary shut down.

Note: A lag compressor may be shut down before it is fully unloaded to avoid a Chiller fault on a Low Water Temperature cut-out under the following conditions: a) if chilled liquid temperature falls below the low end of the Control Range (CR) for more than 37 seconds, b) if chilled liquid temperature drops more than CR/4 below the low limit of the Control Range.

If demand continues to fall and the lead compressor is the only compressor running, it will continue to unload and shut down when leaving liquid temperature drops below the low limit of the Control Range.

Note: The lead compressor may be shut down before it is fully unloaded to avoid a Chiller Fault on a Low Water Temperature fault under the following conditions: a) if chilled liquid temperature drops 2°F below the low limit of the Control Range (CR), b) if chilled liquid temperature drops more than CR/2 below the low limit of the Control Range.

6.3 LOCAL COOLING SETPOINTS KEY

The Local Cooling Setpoints key is used to program the required Leaving Chilled Liquid control temperatures for the application. When the key is pressed, the following message will be displayed:

```
SETPOINT =  44.0 °F
 RANGE = +/- 2.0 °F
```

Key in the desired Chilled Liquid Setpoint and the allowable deviation (Range). The micro will accept values from 10.0 - 70.0°F (-12 to 21°C). For values below 40°F (4°C), Dip Switch S1, Switch #1 on the Microprocessor Board must be properly programmed for Brine Cooling (see Section 3.7). If unacceptable values are entered, or the switch is incorrectly selected when setpoints below 40°F (4°C) are entered, the following message will be displayed before returning to the Control Range message :

```
OUT OF RANGE-
TRY AGAIN!
```

After the Setpoint is keyed in, the cursor will automatically advance to the first digit of the Range as shown :

```
SETPOINT =  44.0 °F
 RANGE = +/- 2.0 °F
```

This value should be programmed for the maximum allowable positive and negative chilled liquid temperature deviation that is acceptable from setpoint in the system application. A typical value would be + / - 2.0 °F (1°C). The micro will accept a range from 1.5 - 2.5 °F (- °C).

After the Setpoint and Range is keyed in, press the ENTER Key to store the data in memory.

NOTE: Failure to press the Enter key will cause the newly programmed values to be ignored and not entered into memory.

After pressing the Enter key, the display will continue to show the message until another key is pressed.

6.4 REMOTE COOLING SETPOINTS KEY

Remote Cooling Setpoints key allows resetting the setpoint upward from the programmed value in memory from a remote device. This feature is typically used for demand limiting or ice storage applications. Reset is accomplished by timed closure of external contacts for a defined period of time and allows reset of the setpoint upward by up to 40°F (22°C) above the setpoint programmed in memory - see Section 1.7.

The maximum allowable reset must be programmed into memory and can be a value of 2 to 40°F (1 to 22°C) depending on user requirements. To program the reset, press the Remote Reset Temperature Range key. The following message will appear :

```
REM SETP =  44.0 °F
 RANGE = +/- 2.0 °F
```

The display indicates the Remote Setpoint which is always equal to the chilled liquid setpoint programmed by the Chilled Liquid Temperature / Range key plus the offset from the remote reset signal. The display will also show the Range which is the programmed maximum deviation allowed for the application. This display is not programmable, and will change the setpoint only through a signal from a remote device.

```
MAX EMS-PWM REMOTE
TEMP RESET = +40 °F
```

Pressing the REM RESET TEMP RANGE Key again scrolls the display to the MAX EMS-PWM REMOTE TEMP RESET which is programmable. This should be programmed to the maximum offset which is required for the application. The maximum programmable value is 40° F (22°C), while the minimum programmable value is 2°F (1°C).

The cursor will stop beneath the first digit of the maximum reset. Key in the maximum reset allowed for the application, remembering to use a leading "0" for values less than 10°F (or 10°C). Press the ENTER Key to store the new value in memory.

7. CLOCK KEYS

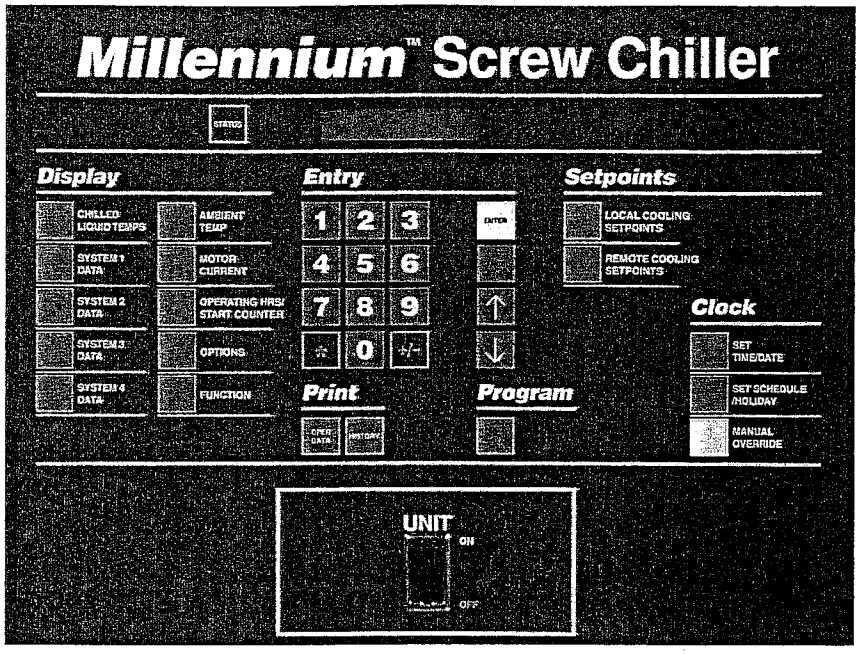

29023A

7.1 GENERAL

The microprocessor features a continuously running internal Clock and calendar and can display actual time as well as the day of the week and the date. An automatic schedule feature is provided for starting and stopping the chiller on individual days of the week, eliminating the need for an external time clock. Also provided are a Holiday feature, allowing special start/stop times to be set for designated holidays, and a Manual Override feature to aid servicing. If the automatic schedule feature is not required, the micro can be programmed to run the chiller on demand as long as the Chiller ON/OFF and System switches are in the ON position.

Programming of the internal clock/calendar and operating schedule are described below :

7.2 SET TIME KEY

When the Set Time key is pressed, a message showing the day, time and date will be displayed with the cursor below the first digit of the time as shown:

```
TODAY IS MON 11.12AM
     19 FEB 1999
```

First press the ↑ or ↓ key until the proper day appears. Press ENTER to move on to the hour part of the display. Next, key in the time (hours/minutes) using a leading "0" for times before 10 o'clock. e.g. 08:31. The cursor will then advance to the AM/PM designation. If necessary press the ↑ or ↓ key to change to the opposite time period.

Next, key in the day of the month (the cursor will automatically skip from AM/PM to the first digit of the date when a "number key" is pressed). The cursor will then skip to the first digit of the year. Key in the year. Always use two digits for the day and the year, using a leading "0" for days 1-9 e.g. 02 FEB 99. Finally, change the month as needed by repetitively pressing the ↑or↓ key until the proper month appears. Once the desired information is keyed in, it must be stored into memory by pressing the Enter key.

Any valid time or date will be accepted. If an out of range value is entered, the following message will be displayed for 3 seconds then revert back to the Set Time display message for reprogramming :

```
OUT OF RANGE-
TRY AGAIN!
```

NOTE: Pressing the Set Time key once enters the "programming" mode in which the displayed time does not update. Pressing the Set Time key a second time enters "display" mode in which the cursor will disappear and the "live" clock will be displayed.

7.3 SET SCHEDULE / HOLIDAY KEY

Messages showing each week day and the holiday start/stop schedule, as shown below, can be displayed using the Set Schedule / Holiday key :

```
MON START = 06:00 AM
    STOP  = 05:30 PM
```

The displays for each day are scrolled through by repetitively pressing the ↑or↓ key. To reprogram any of the daily schedules, key in the new Start time then, if necessary, change the associated AM/PM by pressing the ↑or↓ key.

NOTE : The ↑ or ↓ key can only be pressed once to change AM/PM. If an error is made, press Cancel and begin again.

Next key in the Stop Time (the cursor will automatically skip from AM/PM to the first digit of the date when a "number key" is pressed) and the AM/PM if necessary. Now press the ENTER key to store the new schedule. The display will scroll to the next day. If an unacceptable time is entered, the following message will be displayed for 3 seconds then return to the schedule display :

```
OUT OF RANGE
TRY AGAIN!
```

NOTE : New start/stop times programmed for Monday are automatically used for all following days of the week.

NOTE : Always use the Set Schedule/Holiday key, not the Enter key to scroll through the schedule displays. Pressing the ENTER key after viewing Monday will change times programmed for the remainder of the week to the Monday schedule.

If the chiller is not cycled by the Daily Schedule, but is required to run whenever remote cycling devices, system switches, and main Chiller ON/OFF switch are in the ON position, all 00.00's should be programmed into the daily schedule. This can be done manually for individual days or for all days by pressing Cancel and Enter for the Monday Start / Stop schedule.

NOTE: Programming the DAILY SCHEDULE will not affect on the holiday schedule.

If the chiller is not required to run on a given day, the Start time should be programmed for 00:00 AM and the Stop time programmed for 12:00 AM.

Continue to program each day as needed. After SUN has been entered, the Holiday message will be displayed:

```
HOL START = 08:30 AM
      STOP = 12:00 PM
```

The Holiday (HOL) Start / Stop allows a specific day(s) to be assigned for special requirements. This is provided o that a day(s) needing special start / stop requirements can be programmed without disturbing the normal working schedule. The start / stop times for the Holiday schedule are programmed just as any other day.

NOTE: Only one start/stop time can be programmed which will apply to each of the Holiday days selected.

After the Enter key is pressed, a display to designate which days of the week are holidays will appear :

```
S * M T W T F S
HOLIDAY NOTED BY *
```

When the display appears, the cursor will first stop after Sunday as shown. To designate a day as a holiday, press the " * " key. If a day marked as a holiday is not to be a holiday, press the " * " key. When the " * " key is pressed, the cursor will advance to the next day. Use the ↑ or ↓ keys to move back and forth among days. After all the holiday days are programmed, press Enter to store the new data. The display will then return to the beginning of the Daily Schedule (MON).

NOTE : The Holiday Schedule is only performed once, then erased from memory. This avoids the need for reprogramming after the holiday, as most special Holiday Schedule requirements are occur only occasionally.

If an error is made while programming or a change is required, press Cancel. This will clear the programmed (*) "Holiday" days (the "0" key will not cancel out a " * " and cannot be used for correcting a programming error).

7.4 MANUAL OVERRIDE KEY

When the Manual Override key is pressed, the Daily Schedule programmed into the chiller is ignored and the chiller will start up when water temperature is above the high limit of the Control Range, the Chiller ON/OFF switch is ON, remote cycling devices are CLOSED, and system switches permit.

Normally this key is only used for servicing when the chiller is required to run but the Daily Schedule is in an OFF period. This key avoids the need to reprogram the Daily Schedule. Once activated, Manual Override is only active for a period of 30 minutes and the following status message will be observed.

```
MANUAL
OVERRIDE
```

NOTE : If a Warning - Low Battery fault message appears on the display the internal clock, calendar and program settings cannot be relied on for accuracy. Default values are loaded into the microprocessor memory and the Manual Override key can be used to zero out the daily schedule and allow unlimited operation regardless of the time on the internal clock. Reprogramming of the setpoints and cutout values may also be necessary. When the MANUAL OVERRIDE key is pressed the low battery message will disappear. If a power failure should again occur, the above process will again need to be repeated to bring the chiller back on line. See also Section 2.5.

8. PROGRAM KEY

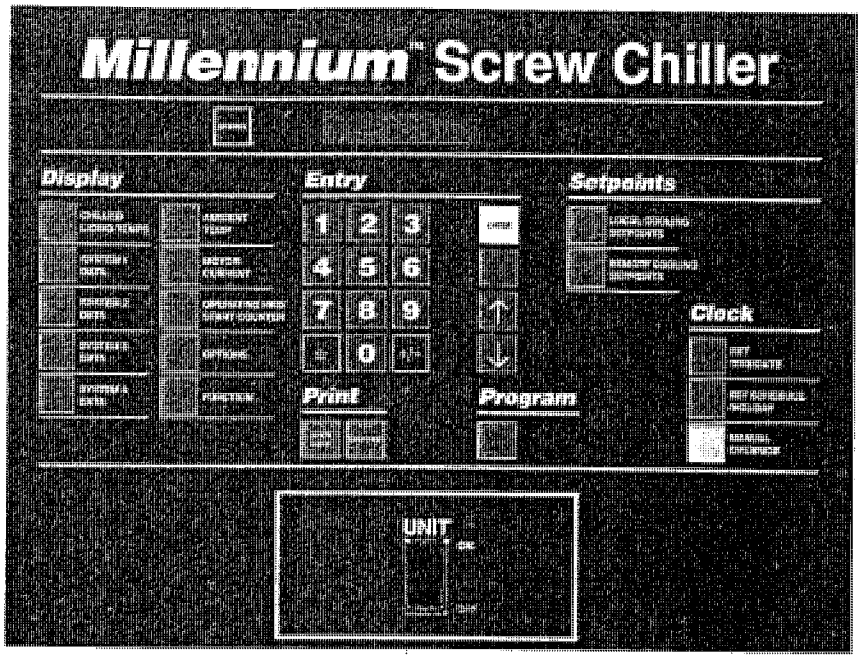

29023A

8.1 GENERAL

The Program key is used to program 12 system operating parameters including cutout points for safeties, anticipatory unload points to avoid faults, and anti-recycle timer duration.

When the Program key is pressed, the following message will be displayed to indicate the display is in the Program Mode:

```
PROGRAM MODE
```

Pressing the ENTER Key causes the display to show the operator in what language the control panel message are displayed.

```
DISPLAY LANGUAGE
ENGLISH
```

The operator may select 5 display message languages. The options are English, Spanish, French, German and Italian. The ↑ or ↓ keys can be used to select the desired language.

Pressing the Enter key repeatedly allows scrolling through the programmable displays.

As each value is displayed, it may be reprogrammed using the 12 Entry keys and ↑↓ Keys. New values will be programmed into memory when the Enter key is pressed and the display will scroll on to the next programmable value.

If an unacceptable value is entered at any stage, the following message is displayed for a few seconds and the entered value is ignored :

```
OUT OF RANGE
TRY AGAIN!
```

The following section shows examples of each programmable value display in the order in which they appear after pressing the Program key, together with guidance on programming each parameter.

NOTE : The programmable values under the Program Key must be checked and properly programmed when commissioning the chiller. Failure to properly program these values may cause damage to the Chiller or operating problems.

8.2 PROGRAM KEY - USER PROGRAMMABLE VALUES

High Discharge Pressure Cut-Out

```
DISCHARGE PRESSURE
CUTOUT = 395.0 PSIG
```

The Discharge Pressure Cutout is a microprocessor backup for the mechanical high pressure cutout located in each refrigerant circuit. This safety is bypassed for the first 5 seconds of operation after which if the cutout point is exceeded for 3 seconds, the system will shut down.

Normally, air-cooled chillers such as YCAS chillers should have the cutout set at 395 PSIG (27 bar) for R22 and R407c models. The micro will, however, accept values between 200 - 399 PSIG (14 - 28 bar). For this cutout to be functional, the Discharge Pressure Read-out Option must be installed (fitted as standard on 50Hz models). This programmable value is password protected.

To program the Discharge Pressure Cutout, key in the desired value and press the Enter key to store the value into memory and scroll to the next display.

High Discharge Pressure Unload Point

```
DISCHARGE PRESSURE
UNLOAD = 360.0 PSIG
```

The Discharge Pressure Unload point is used to avoid a high pressure cutout shutdown by unloading a compressor, if its discharge pressure approaches the cutout value. The chiller can then continue to run automatically at reduced capacity until the cause of the excessive pressure is attended to (e.g. dirty condenser coils) or ceases naturally (e.g. high ambient temperature).

For the first 60 seconds of operation, discharge pressure limiting is disabled. After this time, if discharge pressure exceeds the programmed limit, a 1 second unload pulse will be sent to the slide valve of the affected compressor every 5 seconds until the discharge pressure drops below the programmed limit. The message will be removed and reloading take place when discharge pressure has dropped 60 PSIG (4 bar) below the threshold.

Typically the unload point should be set 20 - 25 PSIG (1.4 - 1.7 bar) below the below the discharge pressure cutout setting. The micro will accept a range of programmable values between 200 - 399 PSIG (14 - 28 bar). This programmable value is password protected.

To program the Discharge Pressure Unload, key in the required setting and press the Enter key to store the value into memory and scroll to the next display.

Low Suction Pressure Cutout

```
SUCTION PRESSURE
CUTOUT = 44.0 PSIG
```

The Low Suction Pressure Cutout protects the evaporator from damage due to ice build up caused by operation at low refrigerant suction pressure.

After the compressor starts, and the pump down cycle is completed (pump down to cutout or 30 seconds, whichever comes first.), suction pressure is monitored as long as the compressor runs. For the first 270 seconds of running, suction pressure can be lower than the programmed cutout, but must be greater than:

$$\text{Programmed Cutout} \times \frac{\text{Run Time}/3 + 10}{100}$$

Example: If programmed Cutout = 44 PSIG (3 bar) and Run Time = 60 seconds

$$\text{New Cutout} = 44 \times \frac{60/3 + 10}{100} = 13.2 \text{ PSIG (0.9 bar)}$$

This cutout value increases with time, until after 270 seconds, it equals the programmed cutout value. If suction pressure falls below the calculated cutout value before 270 seconds, the system will be shut down.

After 270 seconds, a transient timer system prevents short term fluctuations in suction pressure from causing shutdown as follows: If suction pressure drops below the cutout point, a 90 second transient timer starts. During the 90 second time period, the suction pressure must be greater than:

$$\text{Programmed Cutout} \times \frac{100 - \text{transient time remaining}}{100}$$

Example: If programmed Cutout = 44 PSIG (3 bar) and the timer has run 30 seconds:

$$\text{New Cutout} = 44 \text{ PSIG} \times \frac{100-60}{100} = 17.6 \text{ PSIG (1.2 bar)}$$

This cutout value increases with time, until after 90 seconds, it equals the programmed cutout value. If the suction pressure rises to more than 5 PSI (0.3 bar) above the programmed cutout value during the 90 second time period, the timer will be reset. If the suction pressure does not rise to more than 5 PSI (0.3 bar) above the cutout, the timer will remain at zero and if the pressure then falls below the cutout again, the system will shut down on a low pressure fault.

If the Dip Switch on the microprocessor board is set for "Water Cooling" (see Section 3.7), the cutout is programmable between 44 - 70 PSIG (3-5 bar) for both R22 and R-407c models. In this mode, settings of 44 PSIG (3 bar) for R22 and R-407c are recommended. If the Switch is set for "Brine Cooling" (glycol) the cutout is programmable between 5 - 70 PSIG (0.3 bar) for R22 and R-407c models. In this mode, the cutout should be set to the saturated refrigerant pressure equivalent to 18°F (10°C) below the temperature of the chilled liquid. This programmable value is password protected.

To program the Suction Pressure Cutout, key in the required setting and press the Enter key to store the value into memory and scroll the next display.

High Ambient Temperature Cut-Out

```
HIGH AMBIENT TEMP
CUTOUT = 130.0°F
```

The High Ambient Cutout is used to select the ambient temperature above which the chiller may not operate. If the ambient temperature rises 1°F (1°C) above this point, the chiller will shut down. Restart will occur automatically, when temperature falls more than 1°F (1°C) below the cutout and cooling demand is present.

This cutout is normally set at 130°F (54°C) to allow operation to the absolute maximum temperature capability of the electromechanical components; however, values between 100.0 - 130.0°F (38 - 54°C) are accepted. This programmable value is password protected.

To program the High Ambient Cutout, key in the required setting and press the Enter key to store the value into memory and scroll to the next display.

Low Ambient Temperature Cut-Out

```
LOW AMBIENT TEMP
CUTOUT = 25.0°F
```

The Low Ambient Cutout is used to select the ambient temperature below which the chiller may not operate. If the ambient temperature falls 1°F (1°C) below this point, the chiller will shut down. Restart will occur automatically, when temperature rises more than 1°F (1°C) above the cutout and cooling demand is present (see also Section 2.5 page 107). This programmable value is password protected.

If the SW1 Dip Switch on the Microprocessor Board is set for "Standard Ambient Control" (see Section 3.7) the low ambient cutout is set at 25°F (-4°C) and is NOT programmable. If the Dip Switch is set for "Low Ambient Control", programming of the cutout between 00.0 - 50.0°F (8 - 10°C) is allowed. This allows higher values than 25° F (-4°C) to be programmed to shut down the chiller when other cooling methods become operational. Values below 25°F (-4°C) can be used for applications requiring chiller operation at lower temperatures. If operation is occasionally needed below 1°F (-17°C), the cutout should be set at 00.0°F. This will allow operation at any temperature, as the micro will only recognize temperatures above 1°F (-17°C). Temperatures below 1°F (-17°C) will not be displayed.

To program the Low Ambient Cutout, key in the required setting and press the Enter key to store the value into memory and scroll to the next display.

NOTE: Operation below 1°F (-17°C) may occasionally cause nuisance low pressure safety shutdowns. This will generally not cause a problem provided ambient temperature is not expected to be below 1°F (-17°C) for more than a short time.

Low Leaving Liquid Temperature Cut-Out

```
LEAVING LIQUID TEMP
CUTOUT = 36.0°F
```

The Low Leaving Liquid Temperature Cutout protects the evaporator from damage due to ice build up caused by operation below the chilled liquid freezing point.

If the leaving chilled liquid temperature (water or glycol) drops below the cutout point, the chiller will shut down. The chiller will restart automatically when temperature rises more than 4°F (2°C) above the cutout point and cooling demand exists.

If the Dip Switch on the microprocessor board is set for "Water Cooling" (see Section 3.7, page 113) the cutout is automatically set at 36°F (2°C) and cannot be reprogrammed. If the Switch is set for "Brine Cooling" (glycol) the cutout can be programmed between 08.0 - 36.0°F (-13 through -2°C). The cutout should normally be set to 4°F (2°C) below the setpoint minus the range, i.e. 34°F (setpoint) – 2°F (range) - 4°F = 28°F (see Section 6, page 123).

To program the Leaving Liquid Temperature Cutout, key in the required setting and press the Enter key to store the value into memory and scroll to the next display.

High Motor Current Unload Point

```
HIGH MOTOR CURRENT
UNLOAD = 105% FLA
```

The Motor Current Unload point is used to avoid a high motor current safety shutdown by unloading a compressor, if current draw approaches the maximum limit cutout value. The chiller can then continue to run automatically at reduced capacity until the cause of the excessive current is attended to.

The micro will accept between 30 - 105% for the unload point. The motor current safety will shut the compressor down whenever current exceeds 115%.

If the programmable limit is set between 100% and 105% of full load current, this safety will protect against excessive current causing compressor shutdown due to extremely high ambient, high chilled liquid temperature, and condenser malfunction caused by dirt or fan problems.

If the programmable limit is set below 100% of full load current, this feature can be used for "demand limiting". This is important when demand limiting is critical due to power requirements or limitations in the building (See also Section 1.10).

For the first 60 seconds of operation, the unloading safety is disabled. After this time, if motor current exceeds the programmed limit, the SYS x CRNT LIMITING message will appear on the display and a 1 second unload pulse will be sent to the slide valve of the affected compressor every 5 seconds, until the motor current drops below the programmed limit. The message will be removed and additional loading will take place when motor current drops below 90% of the programmed threshold.

Typically, this setpoint should be set at 100% for maximum motor protection, programming for 100% is advisable. When programming values below 100% use of a leading "0" is required, e.g. 085%.

To program the High Motor Current Unload, key in the required setting and press the Enter key to store the value into memory and scroll to the next display.

Anti-Recycle Time

```
ANTI RECYCLE TIMER
= 600 SECS
```

The Anti-Recycle Timer controls the minimum time between starts for each compressor. This is the time available for the heat build up caused by inrush current at start to be dissipated before the next start. Insufficient cooling time between starts can cause heat build up and motor damage. A fast compressor start response is needed in some applications and not in others. Although the minimum setting allowed on this timer will avoid excessive heat build up, adjusting the timer for the longest period acceptable in each application will reduce cycling and maximize motor life. **600 seconds is recommended.**

The micro will accept a range of programmable values between 300 - 600 seconds.

To program the Anti-Recycle Time, key in the required setting and press the Enter key to store the value into memory and scroll to the next display.

Local / Remote Communications

```
LOCAL / REMOTE MODE
LOCAL
```

The panel can be programmed for "Local" or "Remote" communications. "Local" mode allows monitoring through the RS-485 port only. "Remote", allows an external device such as an ISN or Remote Control Center to change setpoints and programming points.

The ↑↓ keys are used to change from Local to Remote. The ENTER Key must be pressed to save the selection in memory.

Imperial / SI Units Display

```
DISPLAY UNITS
IMPERIAL
```

This allows the operator to select the display messages to display Imperial Units (PSIG, F, etc.) or SI (Scientific International, Bars, C, etc.).

The ↑↓ keys are used to change from Imperial to SI units. The ENTER Key must be pressed to save the selection in memory.

Automatic / Manual "Lead / Lag"

```
LEAD / LAG CONTROL
AUTOMATIC
```

The chiller may be selected for manual lead/lag or automatic lead/lag. In some cases the operator may want to manually select the system that is desired to be the lead system. In most cases, automatic lead/lag is selected to allow the micro to attempt to balance run time between the system. Details of manual and automatic lead / lag operation are outlined in Section 1.21.

The ↑↓ keys are used to change from Automatic to Manual lead/lag. The ENTER key must be pressed to save the selection in memory.

If manual control is desired, press the ↑ or ↓ key. One of the following messages will be displayed:

```
LEAD/LAG CONTROL
MANUAL SYS 1 LEAD
```

```
LEAD/LAG CONTROL
MANUAL SYS 2 LEAD
```

System 1, 2, 3 or 4 can be selected as the lead by pressing the ↑ or ↓ key. The ENTER key must be pressed to save the selection in memory.

Automatic / Manual Power Failure Restart

```
POWER FAIL RESTART
AUTOMATIC
```

The chiller may be selected for "Automatic" or "Manual" restart after a power failure. In most instances, "Automatic Restart" is preferred to allow the chiller to automatically restart when power is reapplied after a power failure. When "Manual" is selected, the chiller will not operate after re-application of power until the ON / OFF Rocker Switch on the keypad is cycled OFF and then ON.

NOTE: In most applications, it is undesireable to use Manual Reset on power failure since chillers normally are required to auto-restart after a power failure.

8.3 PROGRAMMING "DEFAULT" VALUES

Programmable values may be individually programmed at start-up or any time thereafter. For ease of programming, once the type of refrigerant is programmed in under the Program key, a "defaults password" may be programmed to automatically program default values into memory. This will preset all programmable values under the Program key to values that will allow operation of the chiller under most operating conditions. This allows quick start-up programming for typical chilled water applications.

To program the default values into memory, first press the PROGRAM key followed by the ENTER key, to program the "refrigerant type". Press the Program key again, key in the numbers "6140", then press Enter. As the code is being keyed in, the digits are not displayed but are shown as " * " as shown :

```
PROGRAM MODE
        * * * *
```

When the Enter key is pressed, the following message will appear:

```
DEFAULT SETPOINTS ?
1 = YES, 0 = NO,     1
```

Key in a "1" for if default setpoints are required, or a "0" for individually programmed values, then press Enter to store the selection into memory.

If individual programming is selected, the display will now return to the Status display. If a default setpoints have been selected, the display will momentarily display the message shown below before returning to the Status display :

```
PROGRAM OPTIONS SET
 TO DEFAULT VALUES
```

NOTE: It is often easier to select Default Setpoints and then reprogram a few that require changing rather than programming each individual value from scratch.

A list of the default values entered into memory, if this program option is selected, is shown below:

Programmable Value		6140 Default Setting
Discharge Pressure Cut-Out	R22	399 PSIG (28 bar)
Low Ambient Cut-Out	Std. Amb.	25°F (-4°F)
	Low Amb.	25°F (-4°F)
High Ambient Temperature Cut-Out		130°F (38°C)
Discharge Pressure Unload	R22	375 PSIG (26 bar)
High Motor Current Unload		100%
Anti-Recycle Timer		600 sec.
Leaving Chilled Liquid Temp Cut-Out		36°F (2°C)
Suction Pressure Cut-Out	R22	44 PSIG (3 bar)

8.4 CONDENSER FAN CONTROL

The chiller is equipped with 8 or 10 condenser fans, with 4 or 5 fans per system as given below. Fan control is via Outside Ambient Temperature (OAT) and Discharge Pressure (DP). There are six stages of fan control utilizing 3 outputs per system. The fan stages will work according to Table 2 or Table 3 depending on the number of fans/ system. There will be a minimum 5 second delay between all fan stages.

Condenser fan ON conditions are governed solely by the Discharge Pressure (DP). When the DP rises above 220 PSIG, fan stage 1 is activated. From here, subsequent fan stages are activated as the DP rises in increments of 15 PSIG, except stage 6, which is activated when the DP rises over 290 PSIG. The system will remain at the highest fan stage reached unless the OFF conditions given in the next paragraph are satisfied.

Condenser fan OFF conditions are governed by both the DP and OAT. Fan staging will be decreased from the highest stage reached if both the DP and OAT requirements are met. For example, if a system is at a fan stage of 4, and the DP falls under 195 PSIG and the OAT drops below 75°F, the fan stage will be reduced to 3. The OFF conditions are given in the next two tables.

The tables below also present fan contactor data for the fans involved in each fan stage. SYS 1 uses relay board #1. SYS 2 uses relay board #2.

YCAS 0130, 0140, 0150, 0160, 0170, 0180 models have 4 condenser fans/system:

	Fan Stage	Fans	ON Conditions DP	OFF Conditions DP & OAT	Fan Contactor	Wire Number	Relay Board Output
SYS 1	1	1	>220 PSIG	<150 PSIG & <60°F	9M	130	15
	2	3	>235 PSIG	<165 PSIG & <65°F	10M	131	14
	3	5, 7	>250 PSIG	<180 PSIG & <70°F	11M, 12M	132	10
	4	1, 5, 7	>265 PSIG	<195 PSIG & <75°F	9M, 11M, 12M	130, 132	10,15
	5	3, 5, 7	>280 PSIG	<210 PSIG & <80°F	10M, 11M, 12M	131, 132	10, 14
	6	1, 3, 5, 7	>290 PSIG	<220 PSIG & <85°F	9M, 10M, 11M, 12M	130, 131, 132	10, 14, 15
SYS 2	1	2	>220 PSIG	<150 PSIG & <60°F	15M	230	15
	2	4	>235 PSIG	<165 PSIG & <65°F	16M	231	14
	3	6, 8	>250 PSIG	<180 PSIG & <70°F	17M, 18M	232	10
	4	2, 6, 8	>265 PSIG	<195 PSIG & <75°F	15M, 17M, 18M	230, 232	10,15
	5	4, 6, 8	>280 PSIG	<210 PSIG & <80°F	16M, 17M, 18M	231, 232	10, 14
	6	2, 4, 6, 8	>290 PSIG	<220 PSIG & <85°F	15M, 16M, 17M, 18M	230, 231, 232	10, 14, 15

TABLE 2 – CONDENSER FAN CONTROL & FAN CONTACTOR DATA FOR DXST UNITS WITH 4 FANS/SYSTEM

	Fan Stage	Fans	ON Conditions DP	OFF Conditions DP & OAT	Fan Contactor	Wire Number	Relay Board Output
SYS 1	1	1	>220 PSIG	<150 PSIG & <60°F	9M	130	15
	2	3, 5	>235 PSIG	<165 PSIG & <65°F	10M, 11M	131	14
	3	7, 9	>250 PSIG	<180 PSIG & <70°F	12M, 13M	132	10
	4	1, 7, 9	>265 PSIG	<195 PSIG & <75°F	9M, 12M, 13M	130, 132	10,15
	5	3, 5, 7, 9	>280 PSIG	<210 PSIG & <80°F	10M, 11M, 12M, 13M	131, 132	10, 14
	6	1, 3, 5, 7, 9	>290 PSIG	<220 PSIG & <85°F	9M, 10M, 11M, 12M, 13M	130, 131, 132	10, 14, 15
SYS 2	1	2	>220 PSIG	<150 PSIG & <60°F	15M	230	15
	2	4, 6	>235 PSIG	<165 PSIG & <65°F	16M, 17M	231	14
	3	8, 10	>250 PSIG	<180 PSIG & <70°F	18M, 19M	232	10
	4	2, 8, 10	>265 PSIG	<195 PSIG & <75°F	15M, 18M, 19M	230, 232	10,15
	5	4, 6, 8, 10	>280 PSIG	<210 PSIG & <80°F	16M, 17M, 18M, 19M	231, 232	10, 14
	6	2, 4, 6, 8, 10	>290 PSIG	<220 PSIG & <85°F	15M, 16M, 17M, 18M, 19M	230, 231, 232	10, 14, 15

TABLE 3 – CONDENSER FAN CONTROL & FAN CONTACTOR DATA FOR DXST UNITS WITH 5 FANS/SYSTEM

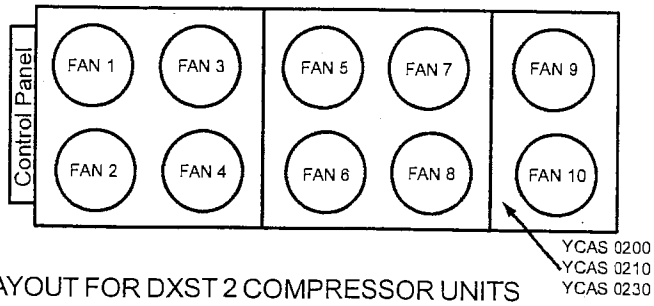

FIGURE 47 – CONDENSER FAN LAYOUT FOR DXST 2 COMPRESSOR UNITS

MAINTENANCE

General Requirements

The units have been designed to operate continuously provided they are regularly maintained and operated within the limitations given in this manual. Each unit should be included in a routine schedule of daily maintenance checks by the operator/customer, backed up by regular service inspection and maintenance visits by a suitably qualified Service Engineer.

It is entirely the responsibility of the owner to provide for these regular maintenance requirements and/or enter into a maintenance agreement with a York International service organization to protect the operation of the unit. If damage or a system failure occurs due to improper maintenance during the warranty period, YORK shall not be liable for costs incurred to return the unit to satisfactory condition.

Note: This maintenance section applies to the basic unit only and may, on individual contracts, be supplemented by additional requirements to cover any modifications or ancillary equipment as applicable.

Warning: The Safety Section of this manual should be read carefully before attempting any maintenance operations on the unit. This section should be read in conjunction with the MBCS Manual.

Daily Maintenance

The following maintenance checks should be carried out on a daily basis by the operator/customer. Please note that the units are not generally user serviceable and no attempt should be made to rectify faults or problems found during daily checks unless competent and equipped to do so. If in any doubt, contact your local YORK Service Agent.

Unit status: Press the 'STATUS' key on the keypad and ensure no fault messages are displayed (refer to the MBCS Manual for explanation of messages and the Trouble Shooting section for courses of action).

Refrigerant leaks: Visually check the heat exchangers, compressors and pipework for damage and gas leaks.

Airflow obstructions: Check the air cooled condenser coil intakes and adjacent areas are clear of foreign materials or obstructions e.g. paper, leaves, etc.

Operating conditions: Read the operating pressures and temperatures at the control panel using the display keys and check that these are within the operating limitations given in the MBCS Manual.

Compressor oil level: Check the compressor oil level after the compressor has been operating on 'FULL LOAD' for approximately half an hour. The oil level should be about half way up the upper of the two sight glasses. When the compressor is operating at 'PART LOAD', the level may fall as far as half way down the lower sight glass but should not fall below this level. When the compressor returns to full load the level will return to the upper sight glass.

Refrigerant charge: When a system starts up, or sometimes after a change of capacity, a flow of bubbles will be seen in the liquid line sight glass. After a few minutes of stable operation, the bubbles should clear leaving just liquid refrigerant showing in the sight glass.

Scheduled Maintenance

The maintenance operations detailed in the following table should be carried out on a regular basis by a suitably qualified Service Engineer. It should be noted that the interval necessary between each 'minor' and 'major' service can vary depending on, for instance, application, site conditions and expected operating schedule. Normally a 'minor' service should be carried out every three to six months and a 'major' service once a year. It is recommended that your local YORK Service Center is contacted for recommendations for individual sites.

Chiller / Compressor Operating Log

A Chiller/Compressor Operating Log is supplied on the following page for logging compressor and chiller operating data.

YORK®

CHILLER/COMPRESSOR
Operating Log

YORK Order No. _____
Compr. Ser. No. _____
Unit Ser. No. _____
Refrigerant _____

Date												
Time												
Hour Meter Reading												
Equipment Room Temp./Outdoor Temp.		/	/	/	/	/	/	/	/	/	/
Compressor	Suction Pressure											
	Suction Temperature											
	Suction Superheat											
	Discharge Pressure											
	Actual Discharge Temperature											
	Oil Pressure											
	Oil Temperature											
	FLA % (Motor -)											
Oil Sep.	Oil Level (example ◒ ●)	○ ○	○ ○	○ ○	○ ○	○ ○	○ ○	○ ○	○ ○	○ ○	○ ○
	Oil Added (gallons or liters)											
Evap. Brine	Inlet Temperature											
	Outlet Temperature											
	Pressure Drop											
	Flow Rate - GPM or l/s											
Condenser Air	Air On Temperature											
	Air Off Temperature											
Condenser Water	Inlet Temperature											
	Outlet Temperature											
	Pressure Drop											
	Flow Rate - GPM or l/s											
Leaving Liquid Refrigerant Temperature												

Remarks:

Note: Temperature and Pressure Units in °F and PSIG respectively unless otherwise noted.

YORK INTERNATIONAL

YORK®

MAINTENANCE REQUIREMENTS FOR YORK YCAS SCREW CHILLERS

PROCEDURE	WEEKLY	QUARTERLY	SEMI-ANNUALLY	YEARLY	EVERY * ___ HOURS
Check oil level in oil separator sight glass	X				
Check liquid line sight glass / moisture indicator	X				
Record system opeating pressures and temperatures	X				
Check programmable operating setpoints and safety cut-outs and assure they are correct for particular application.		X			
Check condenser coils for dirt/debris and clean if necessary	X				
Check compressor superheat on evaporator and economizer TXV's; Check condenser and economizer subcooling[1]			X		
Check compressor and cooler heaters for operation		X			
Sample compressor oil and replace oil if necessary[1]				X	
Leak check the chiller[1]			X		
Disconnect power source and lock out; Check tightness of power wiring connections[1]				X	

* Reserved for customer use for any special site determined requirements.

[1] This procedure must be performed at the specified time interval by an Industry Certified Technician who has been trained and qualified to work on this type of YORK equipment. A record of this procedure being successfully carried out must be maintained on file by the equipment owner should proof of adequate maintenance be required at a later date for warranty validation purposes.

FORM 201.18-NM1

GENERAL PERIODIC MAINTENANCE CHECKS
STANDARD UNITS

SERVICE SCHEDULE	MINOR SERVICE	MAJOR SERVICE All items under Minor Service plus:
Unit general:	Check thermal insulation. Check vibration isolators.	Check main structure. Check paint-work.
Refrigerant systems general:	Check relief valves. Check fusible plugs. Check for pipework damage. Check for leaks. Check moisture indicator. Check suction superheat. Check economiser superheat. Check liquid subcooling.	Check solenoid valves.
Compressors / Oil separator:	Check liquid subcooling. Check oil level. Check oil pressure. Check unloader operation. Check crankcase heater. Check condition of oil.	
Cooler	Check water flow. Check water pressure drop. Check heater mats.	Check water pH / glycol strength.
Air cooled condensers:	Check for airflow obstructions. Check fins. Check fans and fan guards.	Brush fins. Check fan motor bearings.
Power & Control system general:	Check panel condition. Check mains and control wiring. Check sensor locations . Check mechanical HP cut-outs. Check emergency stop. Check residual current devices.	Check all connections. Check compressor contactors. Check fan contactors / overloads. Check sensor / transducer calibration. Check motor protectors. Check contactor contacts.
Microprocessor controls:	Check fault history. Check program settings . Check HP / LP cut-out function's Check pump-down function. Check load / unload function.	Check fan control function. Check ambient cut-out function. Check low oil pressure function.

SPARE PARTS

Recommended Spares

It is recommended that the following common spare parts are held for preventative of corrective maintenance operations.

Description	Item	Part Number
Pressure Transducer 200psi (14 bar)	BSP	025-29583-000
Pressure Transducer 400psi (28 bar)	BDP, BOP	025-29139-001
Sensor High Temperature	BOT, BDT	025-30440-000
Sensor Ambient Temperature	BAMB	025-28663-001
Sensor Water Temperature	BLCT	025-29964-000
Sensor Water Temperature	BMLT	025-29964-000

Other spare parts vary depending on the unit model. Contact your local YORK Sales and Service Center for information and please quote the unit model number and serial number.

When ordering spare parts, we will require the following information to ensure the correct parts are supplied:

Full unit model number, serial number, application and details of the parts required.

All requests for parts should be made to your local YORK Sales and Service Center.

Recommended Compressor Oils

The correct type of oil must be used in the unit as shown on the unit data plate and labels. Standard units use the following oils:

REFRIGERANT	COMPRESSOR OIL
R22 & R407C	YORK Grade L
	Note: "Prototypes" use "E" oil.

Associated Drawings

Models		R22
General Arrangement		
Wiring Diagrams	Schematic Connection Customer wiring Legend	

COMPETENT PERSONS TROUBLE SHOOTING GUIDE

PROBLEM	POSSIBLE CAUSE	ACTION
No display on panel - unit will not start	Mains supply to control system OFF.	Switch on main supply if safe to do so.
	Emergency stop device off.	Check if control panel emergency stop switch and any remote emergency stop devices are in the OFF position. Turn to ON position (1) if safe to do so.
	Under voltage relay tripped.	Check mains supply.
	No supply to - T3.	Check emergency stop switch fuses.
	No 24VAC supply to power board.	Check wiring from - T3 to powerboard and fuse - F3.
	No +12V output from powerboard.	Replace powerboard or isolate excessive load on the board.
NO RUN PERM displayed (No run permissive)	No liquid flow through the cooler.	Ensure that liquid pumps are running. Valves are correctly set and flow is established.
	Flow switch contacts are not made.	Check that the flow switch is functional and is installed according to the manufacturer's instructions. Note: On some systems the pump starter may be wired to the unit and controlled to start by the unit.
SYS # HIGH OIL TEMP	Poor airflow through the condenser coils.	Check for airflow restrictions caused by blockages on intake faces of air coils.
	Measured temperature incorrect.	Check sensor calibration, location and wiring.
Chiller FAULT: LOW AMBIENT TEMP displayed	Ambient air temperature is lower than the programmed operating limit.	Use the 'ambient temp.' key to display the temperature and confirm that the displayed value is approximately correct. The warning message should clear when the ambient air temperature rises above the programmed operating limit.
		Check the programmed settings are correct for the options fitted to the unit.
	Measured temperature is incorrect.	Check sensor calibration, location and wiring.
Chiller FAULT: HIGH AMBIENT TEMP displayed	Ambient air temperature is higher than the programmed operating limit.	Use the "ambient temp.' key to display the temperature and confirm that the displayed value is approximately correct. The warning message should clear when the ambient air temperature falls below the programmed operating limit.
		Check that the programmed settings are correct for the options fitted to the unit.
	Resid. heat is not being dissipated.	Check fan is operating correctly and the rotation is correct. Check for airflow recirculation.
	Measured temperature is incorrect.	Check sensor calibration, location and wiring.
Chiller FAULT: LOW WATER TEMP displayed	Leaving liquid drops below the programmed low limit faster than the unit can unload.	Check for restrictions in the liquid flow line. Check that the liquid flow is stable.
	Unit is not unloading.	Check the supply to the unloader valve solenoid. Check that the compressor unloads correctly.
	Measured temperature is incorrect.	Check sensor calibration, location and wiring.
Chiller FAULT: VAC UNDERVOLTAGE displayed.	Poor mains supply voltage.	Check mains supply is stable and within allowable limits. Check for voltage dip on compressor start.

COMPETENT PERSONS TROUBLE SHOOTING GUIDE - CONT'D

PROBLEM	POSSIBLE CAUSE	ACTION
SYS # HIGH DSCH displayed (High discharge pressure trip)	Poor airflow through condenser coils.	Check for airflow restrictions caused by blockages on intake faces of air coils. Check for damaged fins/return bends. Check for correct fan operation and direction of rotation. Check for non-condensables (air) in system.
	Excessive refrigerant charge.	Check that the sub-cooling is correct.
	Measured pressure is incorrect.	Check discharge transducer calibration and wiring.
SYS # HIGH DSCH TEMP displayed (High discharge temperature)	Suction superheat too high.	Check suction superheat is within range.
	Poor airflow through the condenser coils.	Check for airflow restrictions caused by blockages on intake faces of air coils.
	Measured temperature incorrect.	Check sensor calibration, location and wiring.
SYS # DSCH LIMITING displayed (Discharge pressure unloading)	Discharge pressure unloading due to unit operating above load limit. See also SYS # HIGH DSCH.	Check chilled liquid temperature is within range. Check if ambient air temperature is above design conditions.
SYS # HIGH OIL PRESS DIFF is displayed. (High oil differential pressure.)	Ball valve in oil circuit closed. Dirty / blocked oil filter.	Check ball valves are in open position. Check and change oil filter cartridge.
SYS # LOW SUCTION displayed	Badly adjusted or faulty expansion valve.	Check superheat.
	Reduced evaporator performance.	Check for restricted chilled liquid flow. Check for fouled tube surfaces. Check superheat.
	Low refrigerant charge.	Check subcooling is correct. Check for leaks.
	Restricted refrigerant flow.	Check for blocked filter / drier. Check YLLSV is operating correctly.
	Measured pressure incorrect.	Check suction pressure transducer calibration and wiring.
SYS # LOW CURR/MP/HP displayed	Compressor current too low.	Check compressor mains supply, fuses, contactors and wiring. Check mains supply voltage is within tolerance.
	Measured current is incorrect.	Check for defective current transformer (resistance should be between 42 and 44 Ohms.) Check calibration resistor is correctly fitted.
	Compressor motor protector signal failure.	Check motor protector and wiring. Check compressor motor.
	Mechanical high pressure cut-out trip.	Check compressor discharge valve is open. Check cut-out setting and wiring.
	No motor cooling.	Check motor cooling service valve is open. Check operation of economizer and motor cooling TEV's and liquid solenoid valve.
SYS # CURR LIMITING displayed (Compressor current unloading.)	High compressor motor current has activated unloading.	Check if liquid temperature is within operating limits. Check if ambient air temperature is above operating limits.limits.

SENSOR CALIBRATION CHARTS

Chilled Leaving Water Temperature (CLT) and Chilled Return Water Temperature (CRT) Sensors

Temperature °F (C°)	Resistance ohms	Voltage Vdc
14° (-10°)	16598	1,45
18° (-7.8°)	14896	1,57
21° (-6.1°)	13388	1,69
25° (-3.9°)	12047	1,80
28° (-2.2°)	10856	1,93
32° (0.0°)	9795	2,05
36° (2.2°)	8849	2,17
39° (3.9°)	8005	2,30
43° (6.1°)	7251	2,42
46° (7.8°)	6575	2,54
50° (10°)	5970	2,66
68° (20°)	3748	3,22
86° (30°)	2417	3,69
104° (40°)	1598	4,05

TEST POINTS:

Leaving Water ..... Micro-board J11-7/1

Return Water ..... Micro-board J11-8/2

Ambient Temperature Sensor

Temperature °F (°C)	Resistance ohms	Voltage Vdc
14 (-10°)	55330	0,97
23 (-5°)	42227	1,20
32 (0.0°)	32650	1,45
41 (5°)	25390	1,72
50 (10°)	19900	2,00
59 (15°)	15710	2,29
68 (20°)	12490	2,58
77 (25°)	10000	2,85
86 (30°)	8057	3,11
95 (35°)	6530	3,35
104 (40°)	5327	3,57

TEST POINT:

Test Point ..... Micro-board J11-9/3

Oil & Discharge Temperature Sensors

Temperature °F (°C)	Resistance ohms	Voltage Vdc
32 (0°)	163250	0,282
50 (10°)	99500	0,447
68 (20°)	62450	0,676
86 (30°)	40285	0,976
104 (40°)	26635	1,34
122 (50°)	18015	1,76
140 (60°)	12440	2,20
158 (70°)	8760	2,63
176 (80°)	6290	3,04
194 (90°)	4588	3,40
212 (100°)	3400	3,71
230 (110°)	2556	3,96
248 (120°)	1946	4,17
266 (130°)	1504	4,33
284 (140°)	1174	4,46
302 (150°)	926	4,57

TEST POINTS:

Oil Temperature:

System 1: ..... Extension-board J10-7/3

System 2: ..... Extension-board J10-6/2

Discharge Temperature:

System 1: ..... Extension-board J8-4/1

System 2: ..... Extension-board J8-6/3

Pressure Transducers

0 - 200 psig Transducer		0 - 400 bar Transducer	
Pressure psig	Voltage Vdc	Pressure psig	Voltage Vdc
0	0,5	0	0,5
25	1,0	50	1,0
50	1,5	100	1,5
75	2,0	150	2,0
100	2,5	200	2,5
125	3,0	250	3,0
150	3,5	300	3,5
175	4,0	350	4,0
200	4,5	400	4,5

Red Wire = 5v, Black wire = 0v, White/Green Wire = signal

TEST POINTS:

Suction Pressure:

System 1: ..... Micro-board J13-7/1

System 2: ..... Micro-board J14-7/1

Oil Pressure:

System 1: ..... Micro-board J13-8/3

System 2: ..... Micro-board J14-8/3

Discharge Pressure:

System 1: ..... Micro-board J15-8/3

System 2: ..... Micro-board J15-7/1

LIMITED WARRANTY APPLIED SYSTEMS

WARRANTY ON NEW EQUIPMENT

York International Corporation ("YORK") warrants all equipment and materials of its manufacture, or installation or start-up services in connection therewith, against defects in workmanship and material for a period of one year from date of initial start-up or eighteen (18) months from date of shipment, whichever occurs first. Subject to the exclusions listed below, YORK, at its option, will repair or replace, FOB point of shipment, such YORK products or components as it finds defective. On materials or components furnished by YORK, but manufactured by others, YORK will extend the same warranty it receives from the manufacturer.

Exclusions: Unless specifically agreed to in the contract documents, this warranty does not include the following costs and expenses:

1. Labor to remove or reinstall any equipment, materials, or components.
2. Shipping, handling, or transportation charges.
3. Cost of refrigerants.

No warranty repairs or replacements will be made until payment for all equipment, materials, or components has been received by YORK.

WARRANTY ON RECONDITIONED OR REPLACEMENT MATERIALS

Except for reciprocating replacement compressors, which YORK warrants for a period of one year from date of shipment, YORK warrants reconditioned or replacement materials, or installation or start-up services in connection therewith, against defects in workmanship or material for a period of ninety (90) days from date of shipment. Subject to the exclusions listed below, YORK will replace, FOB point of shipment, such materials or parts as YORK finds defective. However, where reconditioned or replacement materials or parts are placed on equipment still under the original new equipment warranty, then such reconditioned or replacement parts are warranted only until the expiration of such original new equipment warranty.

Exclusions: Unless specifically agreed to in the contract documents, this warranty does not include the following costs and expenses:

1. Labor to remove or reinstall any equipment, materials, or components.
2. Shipping, handling, or transportation charges.
3. Cost of refrigerant.

No warranty repairs or replacements will be made until payment for all equipment, materials, or components has been received by YORK.

ALL WARRANTIES AND GUARANTEES ARE VOID IF:

1. Equipment is used with refrigerants, oil, or antifreeze agents other than those authorized by YORK.
2. Equipment is used with any material or any equipment such as evaporators, tubing, other low side equipment, or refrigerant controls not approved by YORK.
3. Equipment has been damaged by freezing because it is not properly protected during cold weather, or damaged by fire or any other conditions not ordinarily encountered.
4. Equipment is not installed, operated, maintained and serviced in accordance with instructions issued by YORK.
5. Equipment is damaged due to dirt, air, moisture, or other foreign matter entering the refrigerant system.
6. Equipment is not properly stored, protected or inspected by the customer during the period from date of shipment to date of initial start-up.

THIS WARRANTY IS IN LIEU OF ALL OTHER WARRANTIES AND LIABILITIES, EXPRESS OR IMPLIED IN LAW OR IN FACT, INCLUDING THE WARRANTIES OF MERCHANTABILITY AND FITNESS FOR A PARTICULAR PURPOSE. THE WARRANTIES CONTAINED HEREIN SET FORTH BUYER'S SOLE AND EXCLUSIVE REMEDY IN THE EVENT OF A DEFECT IN WORKMANSHIP OR MATERIALS. IN NO EVENT SHALL YORK'S LIABILITY FOR DIRECT OR COMPENSATORY DAMAGES EXCEED THE PAYMENTS RECEIVED BY YORK FROM BUYER FOR THE MATERIALS OR EQUIPMENT INVOLVED. NOR SHALL YORK BE LIABLE FOR ANY SPECIAL, INCIDENTAL, OR CONSEQUENTIAL DAMAGES. THESE LIMITATIONS ON LIABILITY AND DAMAGES SHALL APPLY UNDER ALL THEORIES OF LIABILITY OR CAUSES OF ACTION, INCLUDING, BUT NOT LIMITED TO, CONTRACT, WARRANTY, TORT (INCLUDING NEGLIGENCE) OR STRICT LIABILITY. THE ABOVE LIMITATIONS SHALL INURE TO THE BENEFIT OF YORK'S SUPPLIERS AND SUBCONTRACTORS.

TEMPERATURE CONVERSION CHART

Temperature Conversion Chart - Actual Temperatures

°F	=	°C	°C	=	°F
0		-17.8	-18		-0.4
4		-15.6	-16		3.2
8		-13.3	-14		6.8
12		-11.1	-12		10.4
16		-8.9	-10		14
20		-6.7	-8		17.6
24		-4.4	-6		21.2
28		-2.2	-4		24.8
32		0.0	-2		28.4
36		2.2	0		32
40		4.4	2		35.6
44		6.7	4		39.2
48		8.9	6		42.8
52		11.1	8		46.4
56		13.3	10		50
60		15.6	12		53.6
64		17.8	14		57.2
68		20.0	16		60.8
72		22.2	18		64.4
76		24.4	20		68
80		26.7	22		71.6
84		28.9	24		75.2
88		31.1	26		78.8
92		33.3	28		82.4
96		35.6	30		86
100		37.8	32		89.6
104		40.0	34		93.2
108		42.2	36		96.8
112		44.4	38		100.4
116		46.7	40		104
120		48.9	42		107.6
124		51.1	44		111.2
128		53.3	46		114.8
132		55.6	48		118.4
136		57.8	50		122
140		60.0	52		125.6
144		62.2	54		129.2
148		64.4	56		132.8
152		66.7	58		136.4
156		68.9	60		140
160		71.1	62		143.6
164		73.3	64		147.2
168		75.6	66		150.8
172		77.8	68		154.4
176		80.0	70		158
180		82.2	72		161.6
184		84.4	74		165.2
188		86.7	76		168.8
192		88.9	78		172.4
196		91.1	80		176
200		93.3	82		179.6
204		95.6	84		183.2
208		97.8	86		186.8
212		100.0	88		190.4
216		102.2	90		194
220		104.4	92		197.6
224		106.7	94		201.2
228		108.9	96		204.8
232		111.1	98		208.4
236		113.3	100		212
240		115.6	102		215.6
244		117.8	104		219.2

Temperature Conversion Chart - Differential Temperatures

°F	=	°C	°C	=	°F
0		0	0		0
4		2.2	2		3.6
8		4.4	4		7.2
12		6.7	6		10.8
16		8.9	8		14.4
20		11.1	10		18
24		13.3	12		21.6
28		15.6	14		25.2
32		17.8	16		28.8
36		20	18		32.4
40		22.2	20		36
44		24.4	22		39.6
48		26.7	24		43.2
52		28.9	26		46.8
56		31.1	28		50.4
60		33.3	30		54

Pressure Conversion Chart - Gauge or Differential

PSI	=	BAR	BAR	=	PSI
20		1.38	1.5		21.8
30		2.07	2		29
40		2.76	2.5		36.3
50		3.45	3		43.5
60		4.14	3.5		50.8
70		4.83	4		58
80		5.52	4.5		65.3
90		6.21	5		72.5
100		6.9	5.5		79.8
110		7.59	6		87
120		8.28	6.5		94.3
130		8.97	7		101.5
140		9.66	7.5		108.8
150		10.34	8		116
160		11.03	8.5		123.3
170		11.72	9		130.5
180		12.41	9.5		137.8
190		13.1	10		145
200		13.79	10.5		152.3
210		14.48	11		159.5
220		15.17	11.5		166.8
230		15.86	12		174
240		16.55	12.5		181.3
250		17.24	13		188.5
260		17.93	13.5		195.8
270		18.62	14		203
280		19.31	14.5		210.3
290		20	15		217.5
300		20.69	15.5		224.8
310		21.38	16		232
320		22.07	16.5		239.3
330		22.76	17		246.5
340		23.45	17.5		253.8
350		24.14	18		261
360		24.83	18.5		268.3
370		25.52	19		275.5
380		26.21	19.5		282.8
390		26.9	20		290
400		27.59	20.5		297.3

NOTES

YORK®

USA Proud Sponsor of the 2000 U.S. Olympic Team

36USC380

P.O. Box 1592, York, Pennsylvania USA 17405-1592
Copyright © by York International Corporation 2000
Form 201.18-NM1 (1298)
Supersedes: Nothing

Tele. 800-861-1001
www.york.com

Subject to change without notice. Printed in USA
ALL RIGHTS RESERVED
RPC 4M 1000 10.36
Code: YMSC